ATU-10 by N7DDC (David), version by Glenn, VK3PE (May 27th 2022)

27th Oct 2021…….. minor correction to BOM pages.
28th Oct 2021 L6 should be T50-6 (not T37)
2nd Nov 2021 added note to insulate USB-Micro
5th Nov 2021 corrected error, R1 in BOM as R19
29th Nov 2021 Info on the 3.5mm stereo socket added.
11th Dec 2021 The PCB versions 1.3x using 0805 parts added info.
Jan 24th 2022 Added overlay by value for V1.3x version (0805 parts)
March 15th 2022 Added info on my PCB versions.

These notes cover the variations of N7DDC's original ATU-10 PCB. I built up one of the original boards from Gerber files released by David in August 2021.
All my own subsequent versions are essentially identical to David's in circuitry.

V1.1 my original version, with just the PIC footprints changed from N7DDC original.
V1.2 minor variations to layout
V1.3x changed 0603 parts to 0805 as easier to solder
V1.32 added alternate BNC footprint
V1.32c added 5k1 resistors on USB-C socket.
V2.0 8x8 L/C layout, no software exists for this, PCB NOT made.

David's Github (Google "N7DDC Github")

VK3PE's "ATU-10" web page is here.

David never released any Schematic for his project, so I circuit traced the original PCB to come up with my own Schematic version. Now shown as V1.2 on the Schematic. Obviously tracing a PCB is subject to errors and the PCB's I built using my Schematic are subject to the condition that **I may have made an error** in the Schematic and PCB but so far no issues have been found.

I quickly realised that soldering the two PIC devices will put many off building this QRP ATU.

So, I altered David's original, by choosing easier to solder footprints for the two PIC devices to come up with a new PCB version. A side benefit of this is that the devices I chose are more easily available.

For the PIC16F18877-I/ML I used **PIC16F1454-I/SL or –E/SL** ie. a *SOIC-14 device.*

And, for the PIC16F18877-E/MV I used **PIC16F18877-I/PT OR –E/PT**, a *TQFP-44 device* (44pins instead of 40pin. In a larger physical device)

This means that U4 & U5 on Sheet 1 of the Sch are NOT used, refer to Sheet 2 for the parts actually used.

Most of the remaining parts are 0603 footprint, (0805 in later versions) the various Caps and Resistors as per the N7DDC version. While smaller than I would have preferred, they are still do-able for most

homebuilders (I'm 74) as long as you get over the "fear" of SMD parts. At a pinch, the later board for 0805 parts can be fitted with 1206 also.

The next two pages are the actual Schematics I traced. The first sheet (1 of 2) shows the original PIC devices while the second sheet shows the devices I substituted. I did it this way rather than re-draw the 1st sheet with the new parts. So, 'ignore' the PIC's on sheet one, and use the Sheet two (2 of 2) PIC's. The Bill of Material (BOM) for my PCB version reflects the changes to the PIC devices. The original parts are shown as NOT FITTED.

Just to be clear, my PCB and Schematic MAY have errors. However, in testing it appears that it works in a similar manner to the original PCB by David. **SEE BELOW:**

This document also contains an overlay view of the PCB showing each component by value. David's original PCB shows the values and no component Reference numbers as he released no Schematic. *My PCB is Version V1.2 as you can see on the board. (V1.3x changed 0603 parts to 0805)*

UPDATE 2nd Sept 2021, David has kindly made a test program available which allows the builder to individually test each relays operation.

I ran this program and discovered that the relay for the 47pF Capacitor (RLY3) was connected to the PIC16F18877 port "RE2" instead of the correct "RE1". This error means I have now updated my Schematic (below) to reflect this correction. The PCB itself moves from V1.1 to V1.2. (I never released V1.1 PCB's though)

29th Nov 2021: It may not be clear but the 3.5mm stereo socket is the ICOM interface. It enables users to connect to the IC-705 for example to implement the ICOM ATU protocol used by the ATU-10.

11th Dec 2021: A later version of the ATU-10 PCB by myself uses all 0805 sized parts in place of the 0603 parts. This is to make it a little easier to solder the parts. The "Version" of these boards increments to V1.3x with a suffix "x" of small changes made later. An additional resistor, R24, has been added to V1.32. It allows user to connect 3v3 to the ICSP connector for programming. It is not listed on the BOM, as just a link can be fitted.

Kees, K5BCQ may have V1.2 & V1.3x PCB's available, see his web page or contact by direct email (QRZ.com). Or PM on Group.

NOTE: if NOT using SKT1A (USB-Micro) you will need to insulate the pads when fitting the USB-C connector to avoid potential short. Use Kapton tape or a piece of clear adhesive tape.

The Overlay is shown as V1.1 still, but since there are no changes that affect the Version 1.2, I left it for now as is. **V1.3x though has been added.**

73's VK3PE, Glenn

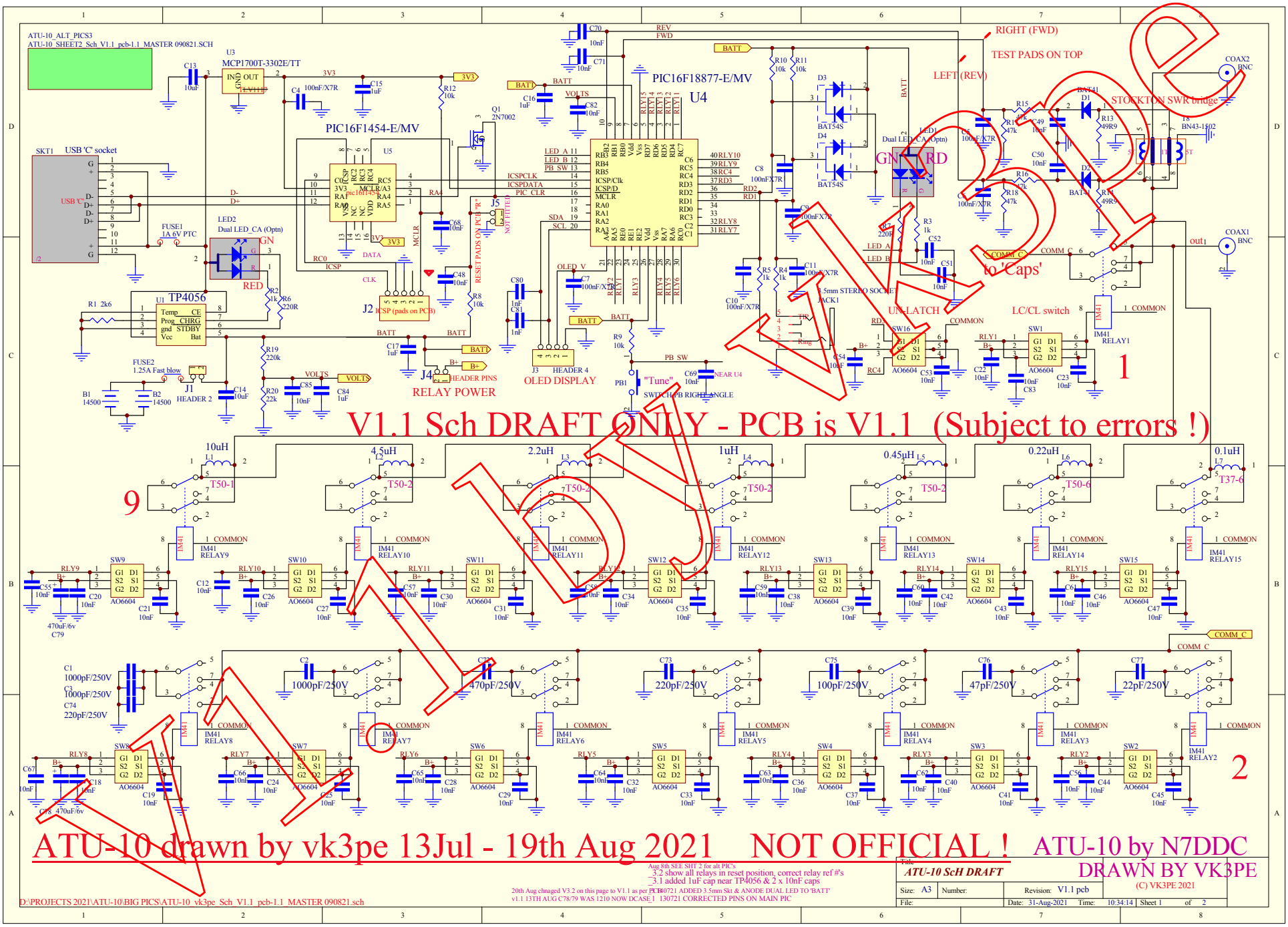

ATU-10_ALT_PICS3
ATU-10_SHEET2_Sch_V1.1_pcb-1.1_MASTER 090821.SCH
PIC16F18877-E/MV
U4
PIC16F1454-E/MV
U5
MCP1700T-3302E/TT
U3
TP4056
U1
USB 'C' socket
SKT1
LED2
Dual LED_CA (Optn)
GN
RED
J2
ICSP (pads on PCB)
J4
HEADER PINS
RELAY POWER
J3
HEADER 4
OLED DISPLAY
J5
RESET PADS ON PCB "R"
NOT FITTED
PB1
"Tune"
SWITCH PB RIGHT ANGLE
NEAR U4
J1
HEADER 2
FUSE1
1A 6V PTC
FUSE2
1.25A Fast blow
B1
14500
B2
14500
Q1
2N7002
D3
BAT54S
D4
BAT54S
LED1
Dual LED_CA (Optn)
GN
RD
RIGHT (FWD)
TEST PADS ON TOP
LEFT (REV)
STOCKTON SWR bridge
COAX2
BNC
COAX1
BNC
BN43-1502
5.5mm STEREO SOCKET
JACK1
UN-LATCH
LC/CL switch
to 'Caps'
1
9
2
10uH
4.5uH
2.2uH
1uH
0.45uH
0.22uH
0.1uH
T50-1
T50-2
T50-6
T37-6
1000pF/250V
470pF/250V
220pF/250V
100pF/250V
47pF/250V
22pF/250V
470uF/6v
V1.1 Sch DRAFT ONLY - PCB is V1.1 (Subject to errors !)
ATU-10 drawn by vk3pe 13Jul - 19th Aug 2021 NOT OFFICIAL !
ATU-10 by N7DDC
DRAWN BY VK3PE
(C) VK3PE 2021
Aug 8th SEE SHT 2 for alt PIC's
3.2 show all relays in reset position, correct relay ref #'s
3.1 added 1uF cap near TP4056 & 2 x 10nF caps
20th Aug chnaged V3.2 on this page to V1.1 as per PCB 130721 ADDED 3.5mm Skt & ANODE DUAL LED TO 'BATT'
v1.1 13TH AUG C78/79 WAS 1210 NOW DCASE_1 130721 CORRECTED PINS ON MAIN PIC
D:\PROJECTS 2021\ATU-10\BIG PICS\ATU-10_vk3pe_Sch_V1.1_pcb-1.1_MASTER 090821.sch
Title
ATU-10 ScH DRAFT
Size: A3
Number:
Revision: V1.1 pcb
File:
Date: 31-Aug-2021
Time: 10:34:14
Sheet 1 of 2

THIS SHEET IS FOR THE ALTERNATE PIC DEVICES I USED ON THE PCB, V1.1

V1.1 Sch DRAFT ONLY - PCB is V1.1 Subject to errors !

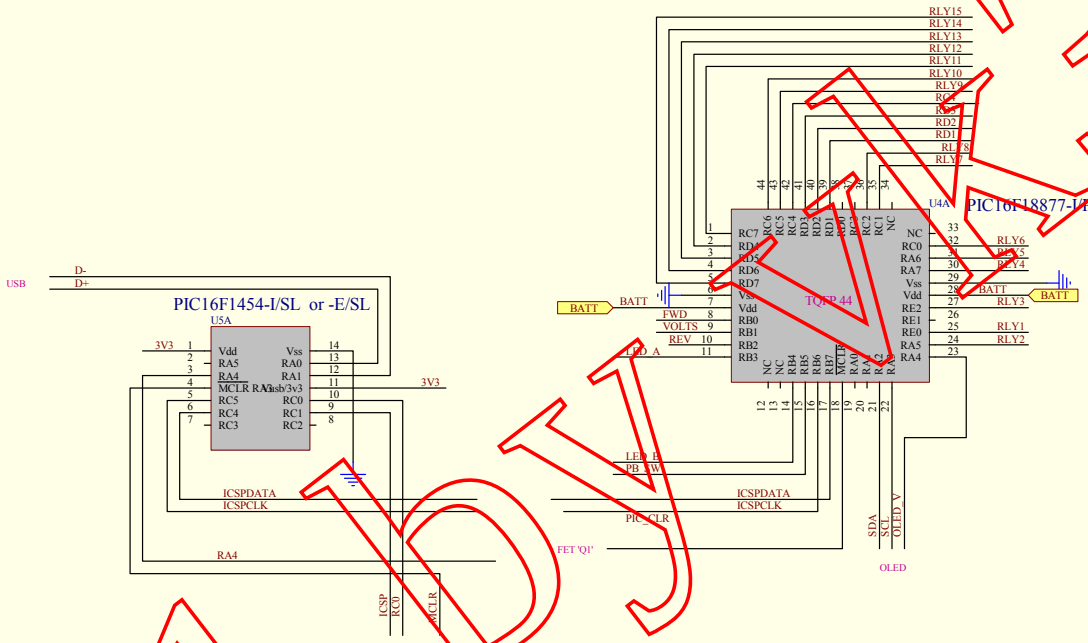

should be "SKT1A"

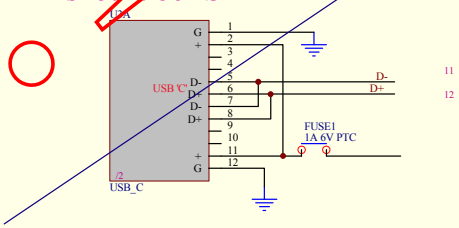

DRAFT 030821 VK3PE

21th Aug chnaged V3.2 on this page to V1.1 as per PCB
AUG 8th CORRECTED PINOUT TO RLY 4/6
AND 'VOLTS' AND 'REV' PINS

Title: *ALTERNATE 'PIC's'*			(C) VK3PE 2021
Size: A3	Number:	Revision: V1.1 pcb	
File:		Date: 31-Aug-2021 Time: 10:33:53	Sheet 2 of 2

D:\PROJECTS 2021\ATU-10\BIG PICS\ATU-10_SHEET2_Sch_V1.1_pcb-1.1_MASTER 090821.sch

V1.1 DV VK3PE

Bill of Material for D:\PROJECTS 2021\ATU-10\BIG PICS\V1.Prj

CAUTION, DO NOT SORT THIS DOCUMENT

27th Oct 2021, C80, C81 were shown as Inductor, corrected to 'Cap'.
28th Oct 2021. L6 was shown as T37-6 SHOULD BE T50-6
1st Nov. 2021 minor typos & added some digikey numbers
5th Nov 2021: 2k6 was shown as R19, should be R1 & 10uF: note re TP4056 module added
11th Dec 2021 V1.3x replaced all the 0603 parts with 0805 & R23 added.
Jan 24th 2022 updated to clarify 0805 version changes.
March 2022 added 5k1 resistors for USB-C socket ONLY. V1.32c PCB's.

** BOM FOR ATU-10 PCB USING LARGER PIC DEVICES FOR EASIER SOLDERING, BY VK3PE 5th Oct 2021 **

(This BOM was initially derived from the V1.2 PCB Schematic.)

This ATU-10 is based heavily on the original by N7DDC. It was modified to allow use of easier to get and solder, PIC Micros.

%%%% **Note all caps 22pF to 1nF rated 250V in tuning section, are COG/NPO types ! %%%%**

See also vk3pe web pages on this project. Link here.
And suggested build procedure here. www.carnut.info

V1.1 or 1.2
V1.3 version PCB will use 0805 parts instead of 0603 so Digikey and other suppliers parts will change

	Part type	Designator	Footprint	Changes for V1.3x (0805)	Description	Notes 1	Digikey or 'other'	Notes 2
QTY	PCB ATU-10 version by vk3pe	Version 1.2 (or 1.1)			PCB	some Group members have PCB's available.	'	Kees, K5BCQ, may have PCB's or check for Gerbers.
1	0.1uH	L7	Toroid_ATU-10		Inductor	T37-6 6t 0.5mm	kitsandparts.com etc	* TOROIDS:- various suppliers available, don't use eBay !!!
1	0.22uH	L6	Toroid_ATU-10		Inductor	T50-6 8t 0.5mm (was shown as T37)	kitsandparts.com etc	
1	0.45uH	L5	Toroid_ATU-10		Inductor	T50-2 10t 0.5mm	kitsandparts.com etc	
1	10uH	L1	Toroid_ATU-10		Inductor	T50-1 32t 0.5mm	kitsandparts.com etc	
1	1uH	L4	Toroid_ATU-10		Inductor	T50-2 14t 0.5mm	kitsandparts.com etc	
1	2.2uH	L3	Toroid_ATU-10		Inductor	T50-2 21t 0.5mm	kitsandparts.com etc	
1	4.5uH	L2	Toroid_ATU-10		Inductor	T50-2 30T 0.5mm	kitsandparts.com etc	
1	BN43-1502 BALUN CORE	T8	'SWR'		CORE	ALT. PART BN43-202 ?	kitsandparts.com etc	0.4mm Copper WIRE required (not critical)
1	1Amp 6v PTC	Fuse1	1206			Farnell 2848541	DIGIKEY 507-1806-1-ND	
1	1.25A Fast blow	Fuse 2	1206		Fuse	Farnell 2834836	DIGIKEY 507-1879-1-ND	
3	1000pF/250V COG/NPO	C1 C2 C3	0805		Cap	Farnell 2821016 or 2834602	DIGIKEY 445-15299-1-ND	
1	470pF/250V COG/NPO	C72	0805		Cap	Farnell 3369282	DIGIKEY 399-15869-1-ND	
2	220pF/250V COG/NPO	C73 C74	0805		cap	Farnell 3340793	DIGIKEY 720-1347-1-ND	
1	100pF/250V COG/NPO	C75	0805		Cap	Farnell 2896861	DIGIKEY 1284-1860-1-ND	
1	47pF/250V COG/NPO	C76	0805		Cap	Farnell 2218866	DIGIKEY 1284-1062-1-ND	
1	22pF/250V COG/NPO	C77	0805		Cap	Farnell 1885437	DIGIKEY 1284-1353-1-ND	
2	49R9 (49.9 OHM)	R13 R14	1206		Resistor	Farnell 1631434	eg DIGIKEY RMCF1206FT49R9CT-ND (1%)	
1	220k 1%	R19	0603 for V1.1 or V1.2	(0805 for V1.3x)	Resistor	Farnell 2447297 or similar		
4	1k	R2 R3 R4 R5	0603 for V1.1 or V1.2	(0805 for V1.3x)	Resistor			
2	220R (220ohms) 1% is better	R6 R7	0603 for V1.1 or V1.2	(0805 for V1.3x)	Resistor			
1	22k	R20	0603 for V1.1 or V1.2	(0805 for V1.3x)	Resistor			
5	10k	R10 R11 R12 R8 R9	0603 for V1.1 or V1.2	(0805 for V1.3x)	Resistor			
4	47k	R15 R16 R17 R18	0603 for V1.1 or V1.2	(0805 for V1.3x)	Resistor			
1	2K6 (2K7 OK)	R1	0603 for V1.1 or V1.2	(0805 for V1.3x)	Resistor			
2	5k1 0603	R24, R25		(0603 for V1.32c)	Resistor	NOTE 0603 used as limited space.		
not fit	short (if used on PCB)	R23	link with wire or 10R		Resistor	This link connects 3v3 to the ICSP port for programming the 16F1454 device.		
8	100nF	C10 C11 C4 C5 C6 C7 C8 C9	0603 for V1.1 or V1.2	(0805 for V1.3x)	Cap	Farnell 432210 or similar		
58	10nF	C12 C18 C19 C20 C21	0603 for V1.1 or V1.2	(0805 for V1.3x)	Cap	Farnell 2320802	eg DIGIKEY 399-17880-1-ND	
	10nF	C22 C23 C24 C25 C26	0603 for V1.1 or V1.2	(0805 for V1.3x)	Cap	Farnell 2320802		
	10nF	C27 C28 C29 C30 C31	0603 for V1.1 or V1.2	(0805 for V1.3x)	Cap	Farnell 2320802		
	10nF	C32 C33 C34 C35 C36	0603 for V1.1 or V1.2	(0805 for V1.3x)	Cap	Farnell 2320802		
	10nF	C37 C38 C39 C40 C41	0603 for V1.1 or V1.2	(0805 for V1.3x)	Cap	Farnell 2320802		
	10nF	C42 C43 C44 C45 C46	0603 for V1.1 or V1.2	(0805 for V1.3x)	Cap	Farnell 2320802		
	10nF	C47 C48 C49 C50 C51	0603 for V1.1 or V1.2	(0805 for V1.3x)	Cap	Farnell 2320802		
	10nF	C52 C53 C54 C55 C56	0603 for V1.1 or V1.2	(0805 for V1.3x)	Cap	Farnell 2320802		
	10nF	C57 C58 C59 C60 C61	0603 for V1.1 or V1.2	(0805 for V1.3x)	Cap	Farnell 2320802		
	10nF	C62 C63 C64 C65 C66	0603 for V1.1 or V1.2	(0805 for V1.3x)	Cap	Farnell 2320802		
	10nF	C67 C68 C69 C70 C71	0603 for V1.1 or V1.2	(0805 for V1.3x)	Cap	Farnell 2320802		
	10nF	C82 C83 C85	0603 for V1.1 or V1.2	(0805 for V1.3x)	Cap	Farnell 2320802		
2	10uF / 10v X7R	C213, C14	1206		Cap	remove 10uF from TP4056 module eBay?	eg DIGIKEY 490-5848-1-ND	NOTE some TP4056 boards only have 1 x 10uF or NONE
2	1nF	C80 C81	0603 for V1.1 or V1.2	(0805 for V1.3x)	Cap	Farnell 722170 or similar	eg DIGIKEY 399-17840-1-ND	
4	1uF 10v	C15 C16 C17 C84	0603 for V1.1 or V1.2	(0805 for V1.3x)	Cap	Farnell 2522396 or similar	eg DIGIKEY 311-1796-1-ND	
2	14500 Li-Ion cell	B1, B2	14500		single cell	14500 3.7V CELL	in VK only, Jaycar SB2301	eBay & others

1	2N7002	Q1	SOT-23		fet	Farnell 1859848	2N7002	
1	3.5mm STEREO SOCKET	JACK1	(3.5MM SOCKET)		SOCKET	PJ-342, PJ-311D	eBay, ALIEXPRESS ETC	straighten the pins to insert into PCB
2	470uF/6V CAP	C78 C79	DCASE		Cap	Farnell 2787443 but note long leadtime	DIGIKEY 399-4701-1-ND	vk3pe used 330uF as it was to hand.
16	A06604	SW1 SW10 SW11 SW12	SOT-23-6		DUAL FET	Farnell not stocked	AO6604 Digikey 785-1078-1-nd	(Kees, K5BCQ may have some available)
	A06604	SW13 SW14 SW15 SW16	SOT-23-6		DUAL FET	Farnell not stocked		Glenn VK3PE may also have some available for VK builders.
	A06604	SW2 SW3 SW4 SW5 SW6	SOT-23-6		DUAL FET	Farnell not stocked		za
	A06604	SW7 SW8 SW9	SOT-23-6		DUAL FET	Farnell not stocked		
2	BAT41FILM diode	D1 D2	SOD		Diode	Farnell 2341646 OR 2341644	DIGIKEY 497-7669-1-ND	
2	BAT54S dual diode	D3 D4	SOT-23		Diode	Farnell 108119402	DIGIKEY 846-BAT54SHMT116CT-ND	
2	BNC Right ANGLE SKT	COAX1 COAX2	BNC_RA		BNC socket	5-1634513-1	DIGIKEY A97569-ND	eBay, Aliexpress, etc TYCO 5-1634513-1
2	DUAL LED COMMON ANODE	LED1 LED2	SIP3	optional	3PIN HEADER	Farnell 2114474		OPTIONAL IF OLED NOT USED need 2 x 3 pin headers
1	HEADER 2 PINS 0.1" pitch	J1	SIP2		male pins	eg Farnell 1462888 is 40pin, cut to suit all		eBay have these in 40pin rows. Cut as required
1	HEADER 4 PINS 0.1" pitch	J3	SIP4		male pins	the headers.		eBay have these in 40pin rows. Cut as required
1	HEADER 2 PINS 0.1" pitch	J4	SIP2		male pins	OLED 0.91" 128x32	eBay and other suppliers	make short cable for OLED using 2 x 4pin header female
1	ICSP provision	J2 connector not req'd	5 holes in PCB !			see my assembly information		to program PIC16545 with Pickit or equivalent
15	IM41 latching relays 3v	RELAY1 RELAY10	"IM41" footprint		eBay have them	latching relays	eBay, Digikey, Mouser etc	NOTE pins to be straightened for fitting
	IM41 latching relays 3v	RELAY11 RELAY12	"IM41" footprint		10 for $10	latching relays	eBay, Digikey, Mouser etc	NOTE pins to be straightened for fitting
	IM41 latching relays 3v	RELAY13 RELAY14	"IM41" footprint		buy 2 lots.	latching relays	eBay, Digikey, Mouser etc	NOTE pins to be straightened for fitting
	IM41 latching relays 3v	RELAY15 RELAY2	"IM41" footprint			latching relays	eBay, Digikey, Mouser etc	NOTE pins to be straightened for fitting
	IM41 latching relays 3v	RELAY3 RELAY4 RELAY5	"IM41" footprint			latching relays	eBay, Digikey, Mouser etc	NOTE pins to be straightened for fitting
	IM41 latching relays 3v	RELAY6 RELAY7 RELAY8 RELA	"IM41" footprint			latching relays	eBay, Digikey, Mouser etc	NOTE pins to be straightened for fitting
1	MCP1700T-3302E/TT (3v3 Reg)	U3	SOT-23		3V3 REGULATO	Farnell 1296592 (LONG leadtime)	AP2125N-3.3TRG1DICT-ND	AP2138N-3.3TRG1DICT-ND
1	PIC16F1454-I/SL or -E/SL	U5A	SOIC-14			Farnell 2305810	PIC16F1454--I/SL or -E/SL	DIGIKEY, MOUSER, Newark, Element14/Farnell etc
1	PIC16F18877-I/PT or -E/PT	U4A	TQFP_44			Farnell 2564170	PIC16F18877-I/PT or -E/PT	DIGIKEY, MOUSER, Newark, Element14/Farnell etc
1	SWITCH PB RIGHT ANGLE	PB1				EVQ-PF106K (Farnell 2056831)	DIGIKEY P10883S-ND	
1	TP4056 (Li-Ion charger IC)	U1	SOIC-8		Li-Ion CHGR. IC	TP4056 (REMOVED FROM eBay MODULE)		
1	USB 'C' socket	SKT1 **or:-**	USB_C			USB 'C' smd Mtg. 12 PIN	DIGIKEY 2073-USB4105-GF-ACT-ND	
1	USB-MICRO 'SMD'	SKT1A (alternate part)	USB_MICRO			**Alternate 'Micro' style USB**	DIGIKEY:- 732-3155-1-ND	* alternate USB-Micro type on V1.2 pcb (NOT on V1.1)
0	NOT FITTED	J5				"RESET"		
0	*PIC16F1454-E/MV NOT FIT*	***U5 NOT FITTED***	*NOT FITTED*					
0	*PIC16F18877-E/MV NOT FIT*	***U4 NOT FITTED***	*NOT FITTED*					
1	PIC16F1454-I/SL or -E/SL	U4a	this part is for VK3PE ATU-10 PCB			Farnell have this listed in different footprint	Digikey eg PIC16F1454T-I/SL-ND	
1	PIC16F18877-I/PT or -E/PT	U5a	this part is for VK3PE ATU-10 PCB				Digikey eg PIC16F18877-/PTTR-ND	
1	Case 3 types suitable	1) 100x71x25mm 2) 100x82mm	3) 100x88mm			PCB must be cut to fit case options 1) & 2)	eBay, Aliexpress, Amazon etc	V1.1 pcb only fits 71mm case, V1.2 suits all cases listed.
								71mm case eBay item 273929800323
2	Front and rear panels drilled and cut to suit. (NOT available from vk3pe)					N7DDC Gerbers for panels should fit but NOT tested.		
as req'd	header jumper skts for J1 & J4	caution, don't fit these parts initially.						
as req'd	External coax cables from Tx and antenna required, also if used with ICOM IC-705 then a male to male 3.5mm stereo cable is required							
2	Cell Li-P 3.7v	type 14500						

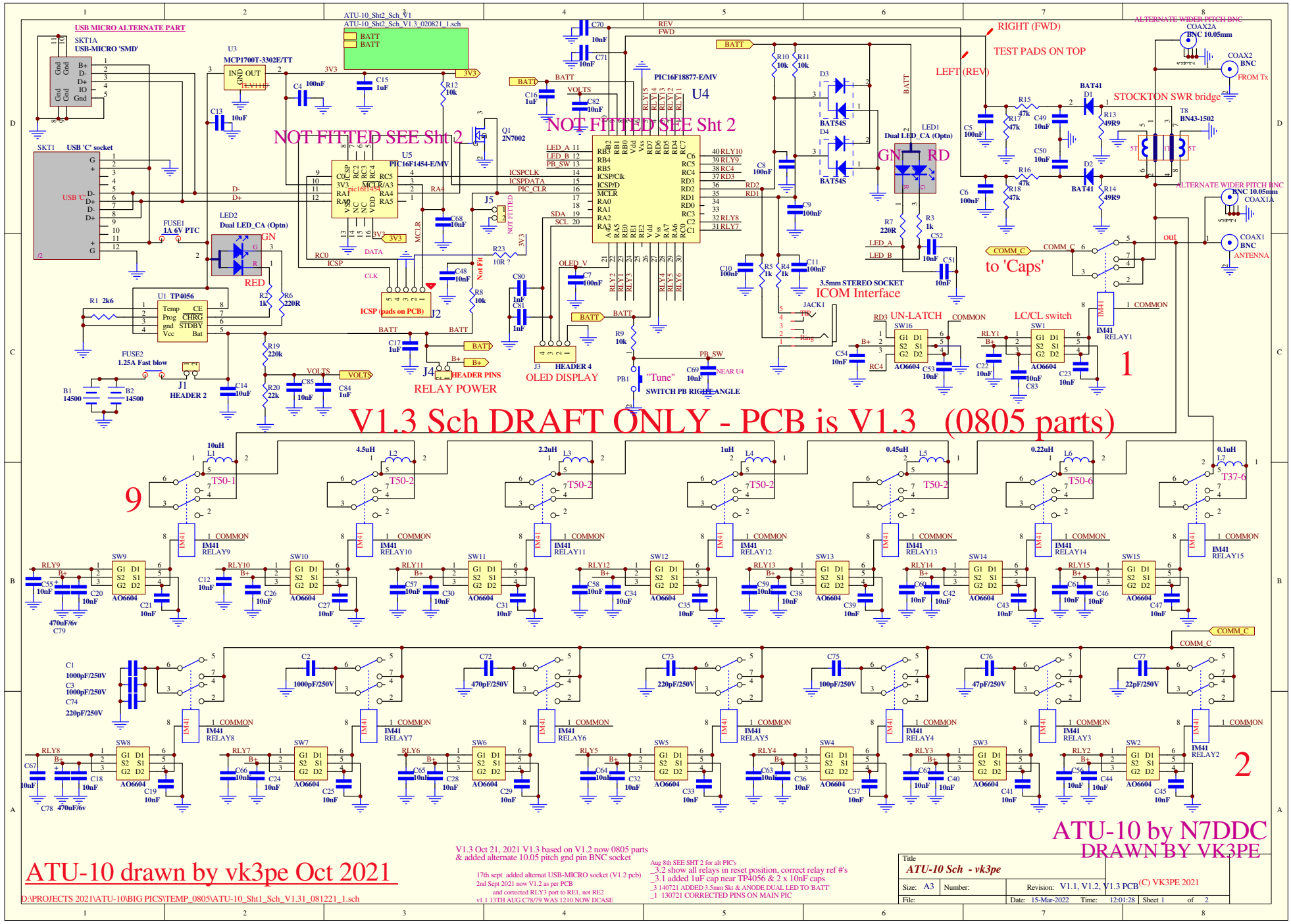

ATU-10 by N7DDC
DRAWN BY VK3PE

ATU-10 drawn by vk3pe Oct 2021

V1.3 Oct 21, 2021 V1.3 based on V1.2 now 0805 parts
& added alternate 10.05 pitch gnd pin BNC socket

17th sept added alternat USB-MICRO socket (V1.2 pcb)
2nd Sept 2021 now V1.2 as per PCB
and corrected RLY3 port to RE1, not RE2
v1.1 13TH AUG C78/79 WAS 1210 NOW DCASE

Aug 8th SEE SHT 2 for alt PIC's
_3.2 show all relays in reset position, correct relay ref #'s
_3.1 added 1uF cap near TP4056 & 2 x 10nF caps
_3 140721 ADDED 3.5mm Skt & ANODE DUAL LED TO 'BATT'
_1 130721 CORRECTED PINS ON MAIN PIC

D:\PROJECTS 2021\ATU-10\BIG PICS\TEMP_0805\ATU-10_Sht1_Sch_V1.31_081221_1.sch

Title: ATU-10 Sch - vk3pe			
Size: A3	Number:	Revision: V1.1, V1.2, V1.3 PCB	(C) VK3PE 2021
File:		Date: 15-Mar-2022 Time: 12:01:28	Sheet 1 of 2

THIS SHEET IS FOR THE ALTERNATE PIC DEVICES I USED ON THE PCB,

NOTE !! U4 & U5 on sheet one are not used.

V1.3 Sch - PCB is V1.3 (0805 parts)

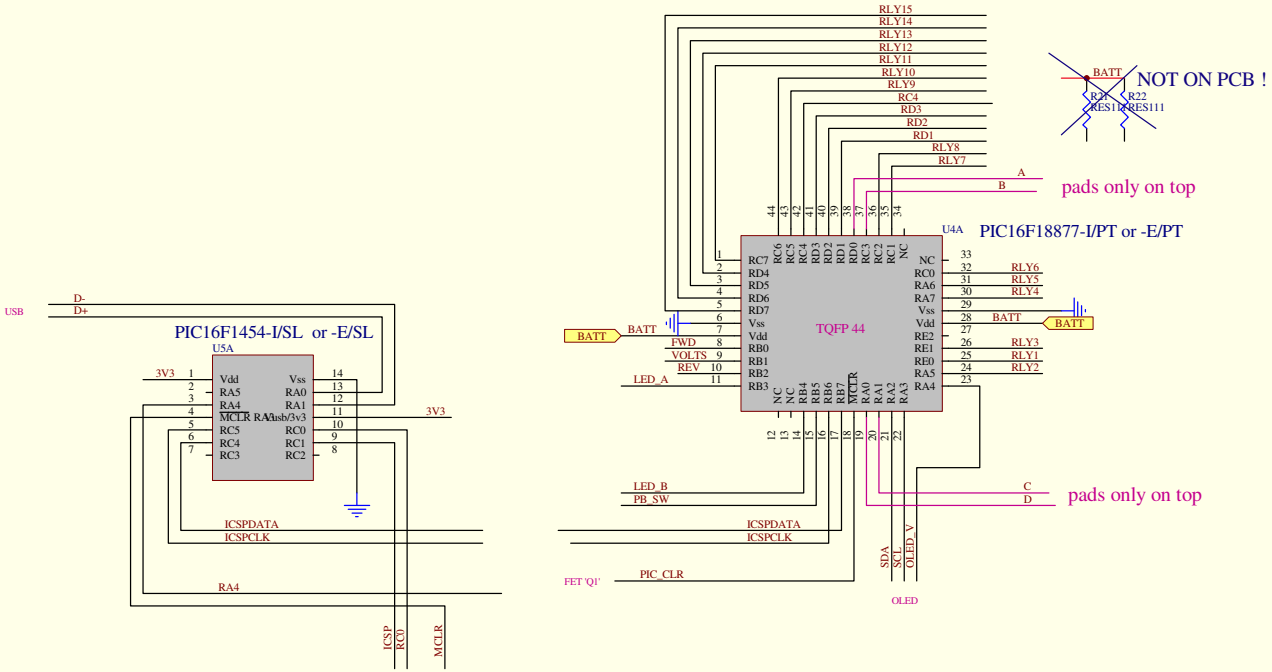

V1.3x has alternate BNC sockets pitch

DRAFT 030821 VK3PE Sept 2021 was V1.2

Oct 21, 2021 V1.3 based on V1.2 now 0805 parts

2nd Sept V1.2 pcb:- fixed port for RLY3 was RE2 now RE1
21th Aug chnaged V3.2 on this page to V1.1 as per PCB
AUG 8th CORRECTED PINOUT TO RLY 4/6
AND 'VOLTS' AND 'REV' PINS

Title: *ALTERNATE 'PIC's'*			(C) VK3PE 2021
Size: A3	Number:	Revision: V1.1 pcb	
File:		Date: 15-Mar-2022 Time: 12:03:39	Sheet 2 of 2

D:\PROJECTS 2021\ATU-10\BIG PICS\TEMP_0805\ATU-10_Sht2_Sch_V1.3_020821_1.sch

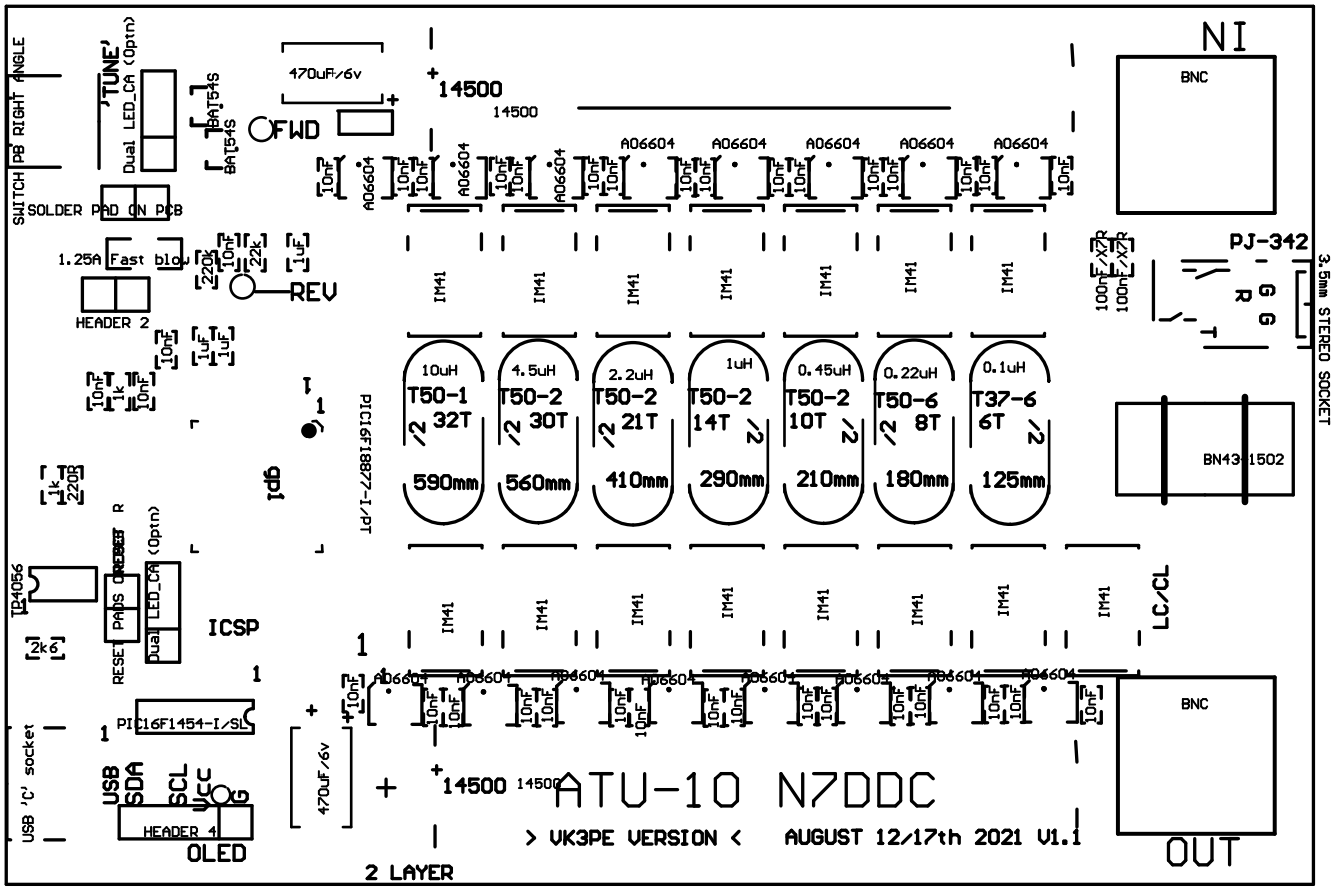

ATU-10 N7DDC
> VK3PE VERSION < AUGUST 12/17th 2021 V1.1
2 LAYER
NI
OUT
BNC
PJ-342
3.5mm STEREO SOCKET
BN43-1502
LC/CL
ICSP
OLED
HEADER 4
HEADER 2
PIC16F1454-I/SL
PIC16F18877-I/PT
SWITCH PB RIGHT ANGLE
SOLDER PAD ON PCB
1.25A Fast blow
'TUNE'
Dual LED_CA (Optn)
FWD
REV
470uF/6v
14500
10uH T50-1 32T 590mm
4.5uH T50-2 30T 560mm
2.2uH T50-2 21T 410mm
1uH T50-2 14T 290mm
0.45uH T50-2 10T 210mm
0.22uH T50-6 8T 180mm
0.1uH T37-6 6T 125mm
IM41
A06604
10nF
100nF/X7R
TP4056
USB 'C' socket
USB
SDA
SCL
Vcc
G
RESET PADS

47k
47k
1k
1k
49R9
49R9
BAT41
BAT41
10nF
10nF
22pF/250V
47pF/250V
100pF/250V
220pF/250V
470pF/250V
1000pF/250V
220pF/250V
1000pF/250V
1000pF/250V
10nF
10nF
10nF

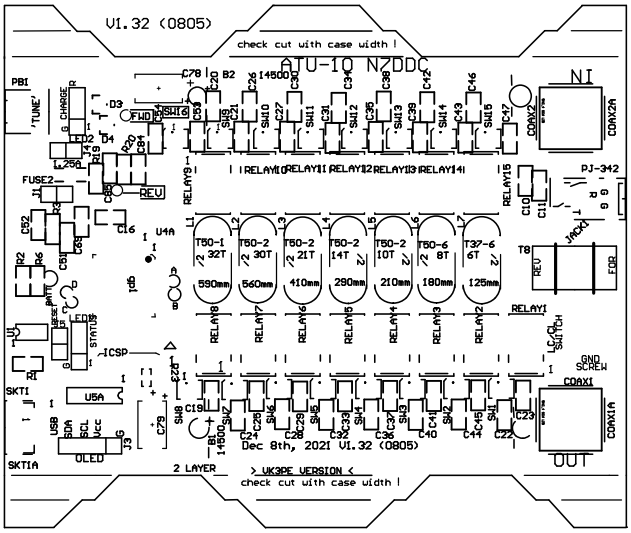
V1.32 (0805)
check cut with case width !
ATU-10 N7DDC
NI
OUT
PJ-342
Dec 8th, 2021 V1.32 (0805)
2 LAYER
> UK3PE VERSION <
check cut with case width !

2vk3pe

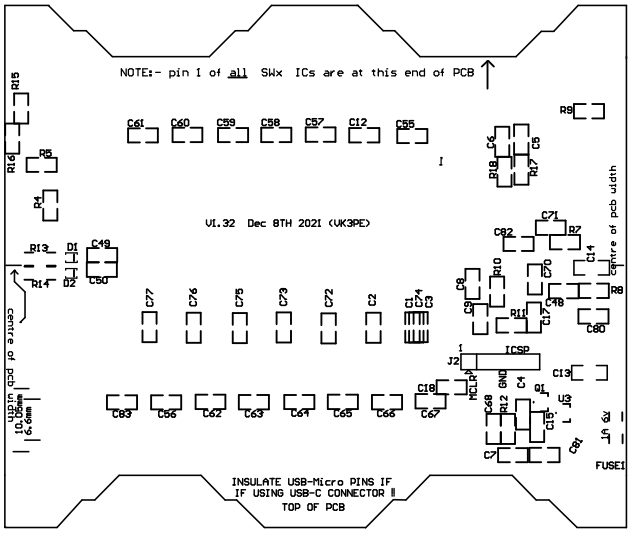
NOTE:- pin 1 of all SWx ICs are at this end of PCB
V1.32 Dec 8TH 2021 (VK3PE)
centre of pcb width
centre of pcb width
10.05mm
6.6mm
ICSP
J2
MCLR
GND
C4
Q1
U3
FUSE1
INSULATE USB-Micro PINS IF
IF USING USB-C CONNECTOR !!
TOP OF PCB

THIS SHEET IS FOR THE ALTERNATE PIC DEVICES I USED ON THE PCB,

NOTE !! U4 & U5 on sheet one are not used.

V1.3 Sch - PCB is V1.3 (0805 parts)

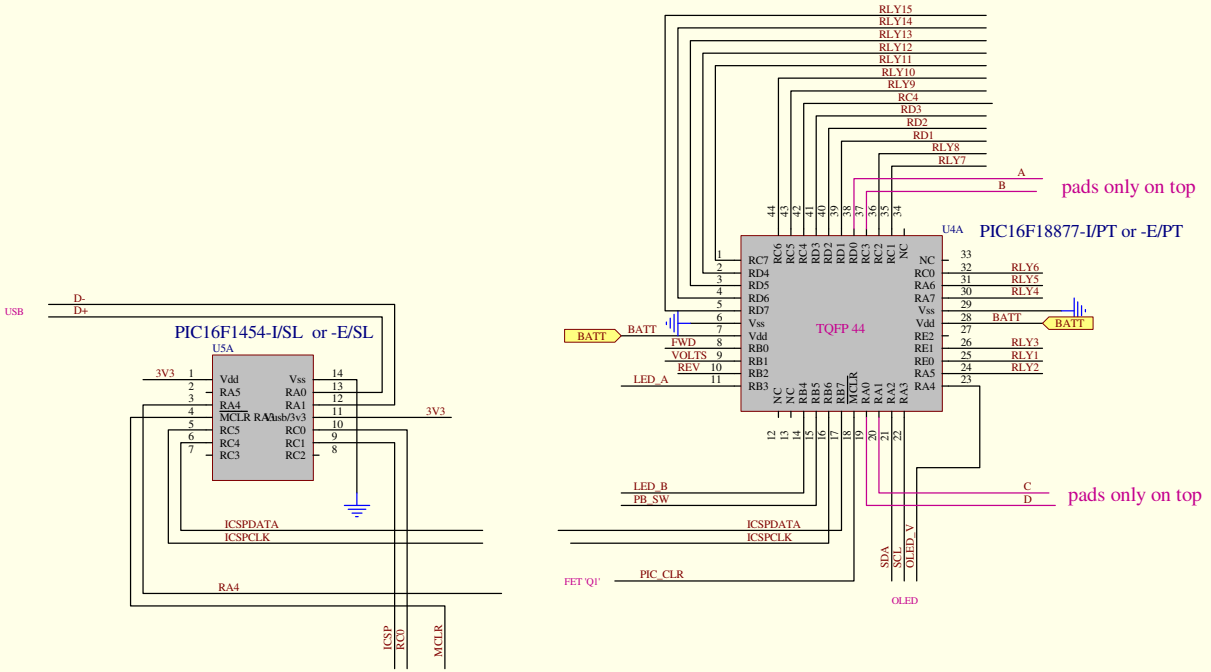

V1.3x has alternate BNC sockets pitch

DRAFT 030821 VK3PE Sept 2021 was V1.2

Oct 21, 2021 V1.3 based on V1.2 now 0805 parts

2nd Sept V1.2 pcb:- fixed port for RLY3 was RE2 now RE1

21th Aug chnaged V3.2 on this page to V1.1 as per PCB

AUG 8th CORRECTED PINOUT TO RLY 4/6

AND 'VOLTS' AND 'REV' PINS

Title: *ALTERNATE 'PIC's'*			(C) VK3PE 2021
Size: A3	Number:	Revision: V1.1 pcb	
File:		Date: 17-Jul-2022 Time: 13:59:24	Sheet 2 of 2

ATU-10_SHT2_SCH_V1.32C_020821_1.SCH

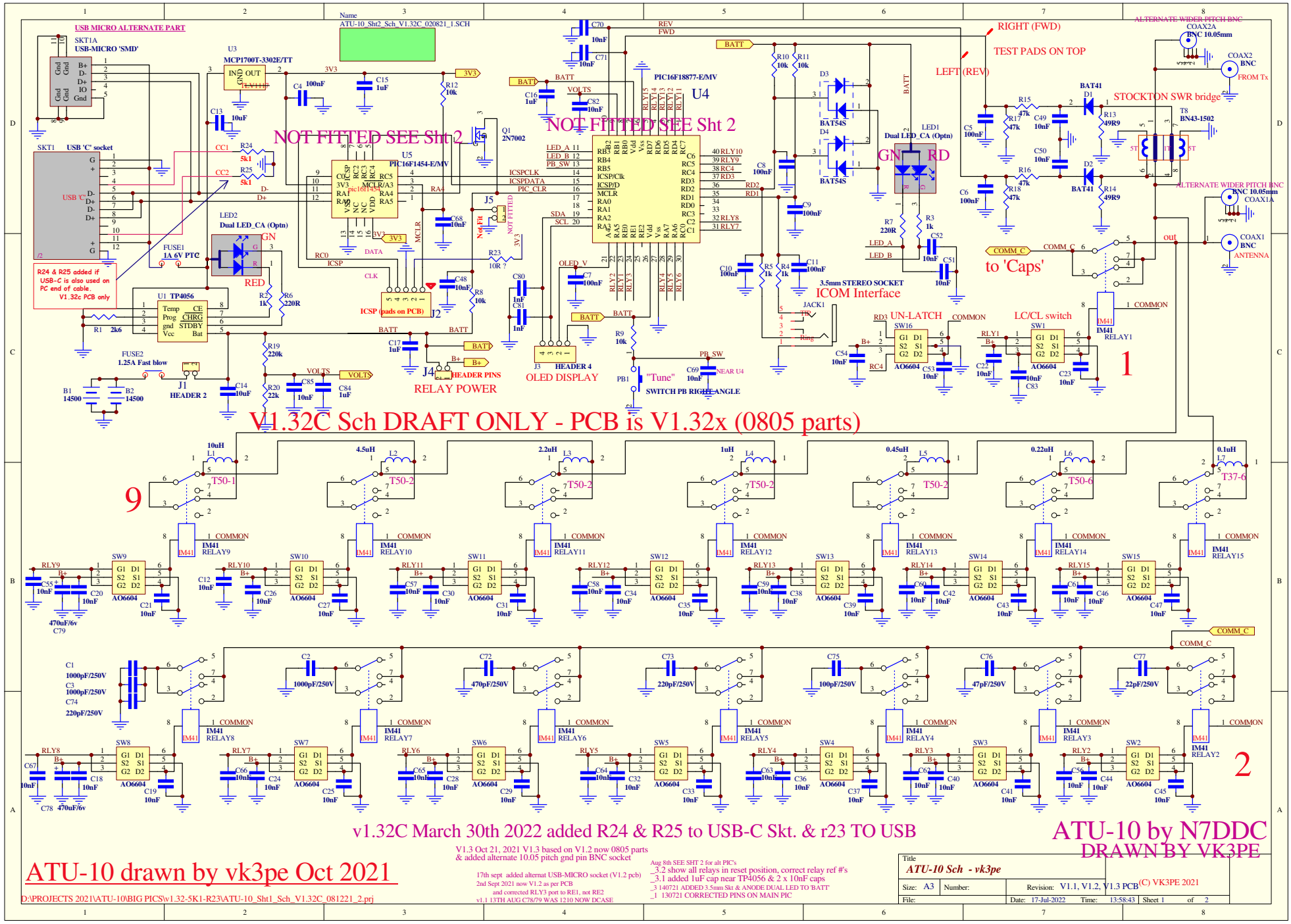
USB MICRO ALTERNATE PART
SKT1A
USB-MICRO 'SMD'
SKT1 USB 'C' socket
R24 & R25 added if USB-C is also used on PC end of cable. V1.32c PCB only
NOT FITTED SEE Sht 2
NOT FITTED SEE Sht 2
U4 PIC16F18877-E/MV
U5 PIC16F1454-E/MV
Q1 2N7002
LED2 Dual LED_CA (Optn)
RED
GN
LED1 Dual LED_CA (Optn)
GN RD
RIGHT (FWD)
TEST PADS ON TOP
LEFT (REV)
STOCKTON SWR bridge
ALTERNATE WIDER PITCH BNC
FROM Tx
to 'Caps'
3.5mm STEREO SOCKET
ICOM Interface
UN-LATCH
LC/CL switch
ICSP (pads on PCB)
RELAY POWER
OLED DISPLAY
HEADER 4
HEADER PINS
SWITCH PB RIGHT ANGLE
"Tune"
V1.32C Sch DRAFT ONLY - PCB is V1.32x (0805 parts)
9
1
2
T50-1
T50-2
T50-6
T37-6
IM41 RELAY1
IM41 RELAY2
IM41 RELAY3
IM41 RELAY4
IM41 RELAY5
IM41 RELAY6
IM41 RELAY7
IM41 RELAY8
IM41 RELAY9
IM41 RELAY10
IM41 RELAY11
IM41 RELAY12
IM41 RELAY13
IM41 RELAY14
IM41 RELAY15
AO6604
v1.32C March 30th 2022 added R24 & R25 to USB-C Skt. & r23 TO USB
V1.3 Oct 21, 2021 V1.3 based on V1.2 now 0805 parts
& added alternate 10.05 pitch gnd pin BNC socket
17th sept added alternat USB-MICRO socket (V1.2 pcb)
2nd Sept 2021 now V1.2 as per PCB
and corrected RLY3 port to RE1, not RE2
v1.1 15TH AUG C78/79 WAS 1210 NOW DCASE
Aug 8th SEE SHT 2 for alt PIC's
_3.2 show all relays in reset position, correct relay ref #'s
_3.1 added 1uF cap near TP4056 & 2 x 10nF caps
_3 140721 ADDED 3.5mm Skt & ANODE DUAL LED TO 'BATT'
_1 130721 CORRECTED PINS ON MAIN PIC
ATU-10 by N7DDC
DRAWN BY VK3PE
ATU-10 drawn by vk3pe Oct 2021
D:\PROJECTS 2021\ATU-10\BIG PICS\w1.32-5K1-R23\ATU-10_Sht1_Sch_V1.32C_081221_2.prj
ATU-10 Sch - vk3pe
Size: A3
Number:
Revision: V1.1, V1.2, V1.3 PCB
(C) VK3PE 2021
Date: 17-Jul-2022
Time: 13:58:43
Sheet 1 of 2

ATU-10 (vk3pe) PCB assembly. (8th Oct 2021)

Intro:

This PCB is based on the ATU-10 board designed by N7DDC. The only variation for the boards by vk3pe is that the two PIC devices are now a larger physical type. This achieves two things:

1. Easier to find parts. Both devices are in reasonable supply from the usual outlets at time of writing. The originals are impossible find.
2. Easier to solder. Being larger and with wider spaced pins, means both are much easier to solder down.

The PCB is designated Version "1.2". It was designed by circuit tracing the original PCB by N7DDC in August of 2021. Since there was never an official Schematic ever available from N7DDC, then it must be accepted that there might be some errors. However, having built two PCB's, there have been no faults found in this version.

N7DDC has released a relay test program which enables the finished board to be tested to confirm that all the relays operate as expected. It is highly recommended to use this program before putting the ATU into service. N7DDC's information on this project is at his Github. Goto the Firmware section for the test program and the other Files required.

Assembly:

This is not a part by part assembly document although it seems I wrote more than I intended! It assumes some basic knowledge at least of reading Schematics, finding parts references in the Bill of Material and soldering skills. Not mention sourcing all the parts needed. I have also provided an overlay of the PCB showing parts by value. There is no need to be frightened of smd assembly if this is your first attempt at it. In fact it's recommended that builders checks out various YouTube videos on this subject before assembling this PCB if you have no smd experience. You only need basic tools. No ovens, heat guns etc are needed.

In the shack here, a 20+year old Hakko926 soldering iron is used, but with a very fine pointed tip. Don't use some old tip you have been using for some time, get a fresh one. Tweezers are needed to pick up the parts. Plus the usual small hand tools. A magnified desk lamp or headset are handy. Make sure you have spares of the smaller parts, as sometimes you may lose them from the tweezers and they are stupidly hard to find on the floor!

The Case

The V1.2 PCB was designed to suit three different case types. 100x71mm as per N7DDC original, 100x82mm or 100x88mm. There are lines marked on the PCB which designate where the board should be cut to suit each case size.

- For the 100x71mm case, cut the tabs off entirely. It is prudent though to cut a little less and check with the actual case you have.
- For the 100x82mm case, the V1.2 PCB markings are INCORRECT due to not having an actual case to check the sizing at the time. The case only arrived on the 6th Oct 2021 and is narrower internally than though. Actual width to cut the PCB should be 75.5mm. This is about 1.5mm on the inside of the central cut marks on each tab on both sides of the V1.2 PCB, but measure first against your case.

The PCB will be updated to V1.21 to correct the cut line for 82mm case.

- For the 100x88mm case, no case is available here either so check carefully. Kees, K5BCQ reports no problems with the 88mm wide case though.

The PCB must be cut before any assembly begins. Repeat: check your case BEFORE cutting the PCB !

Recommended assembly sequence:

It's prudent not to fit the PICs or dual FET devices, before testing the 3v3 regulator first. Assemble all the small components around the regulator area, the TP4056 (no 14500 cells yet) and then check the regulator actually outputs 3.3v or close to it. Plug in the USB cable to the PCB and your PC and with a voltmeter, check that the regulator output is actually 3.3v. If not, find the problem.

Only then can you proceed with other parts. Fit the dual FET devices first as its difficult to fit them if the capacitors adjacent to them are fitted. Note there is a tiny 'dot' on the PCB which designates pin 1 of the FET. When you fit the FET make sure it's dot aligns with the PCB dot. It can be very hard to see the dot on the FET. I suggest only soldering ONE pin of each FET so you can double check orientation again. You may need a magnifier and try the FET at different angles to see the dot. (The BAT41 diodes are similar, hard to see the bar at the cathode end)

Then you can fit all the other parts except the relays, toroids, SWR ferrite and BNC sockets. Fit the header pins for the OLED and J1 & J4. (J5 is not fitted.) Don't fit the links on J1 & J4 yet. Unless you are going to use the dual LED's, don't bother fitting LED1 & LED2 header pins. Wait until the end of the build to fit the 3.5mm socket. You need to carefully straighten the pins on the socket with pliers to fit into the PCB.

If using the OLED display, a short cable will be needed to connect it to the PCB. In this build, header pins were fitted to the OLED also so a short cable with header receptacles (socket) needs to be made. This is the cable used, assuming use of a standard case. It's a good idea to identify the "Vcc" wire in the cable so that you orient the cable correctly on the OLED and PCB. I used red heat shrink as you can see. The cable is made from an offcut from a piece of ribbon cable. This is the cable for the standard 71mm wide case. Other cases may require a longer cable.

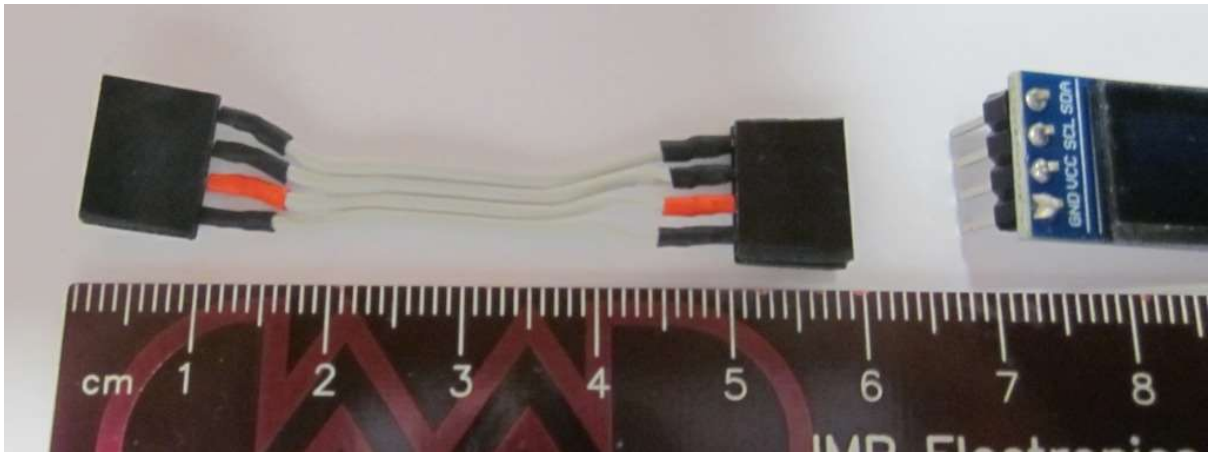

Then you can fit the PIC16F1454 device. It's a SOIC-14 footprint and easy to solder, use a minimum of solder though. DON'T fit the other PIC yet. Check orientation.

Programming the Firmware

Now the PIC can be programmed. You will need a Pickit3 or Pickit4 or equivalent which can be found on eBay etc. The Pickit2 might work, I don't know.

This is a typical "clone Pickit3"

Connect the programmer to the ICSP pins. Observe the pin numbers, pin 1 of the Pickit (white triangle) goes to pin 1 of the ICSP connector on the board which is marked with a "1". (It's also a square pad) Note pin 6 is not used. I just fit header pins in the holes without soldering them as it's only needed once. Maintain a bit of sideways pressure on the pins to ensure contact while programming.

Plug the Pickit into the ATU-10 ICSP as above using a USB port on your PC.

Plug another USB cable into your PC and into the ATU-10.

Run the AP, Microchips "MPLAB X IPE v5.45" (earlier versions might also work.) available from the Microchip web site.

Select the PIC16F1454 as below: (down the page)

Click on the "Connect" button and you should see a dialogue with 'connected' shown. Ie the PIckit is connected.

Click on the "Browse" button and navigate to the "raw_1454.hex" file on your PC. (Downloaded from Github)

Click on the "ERASE" Button, wait a few seconds, then "PROGRAM". After a few period, the PIC16F1454 should be programmed. You only ever need to do this once as all updates after this to Firmware are done via a copy/paste, details below which is below.

Disconnect the USB cable.

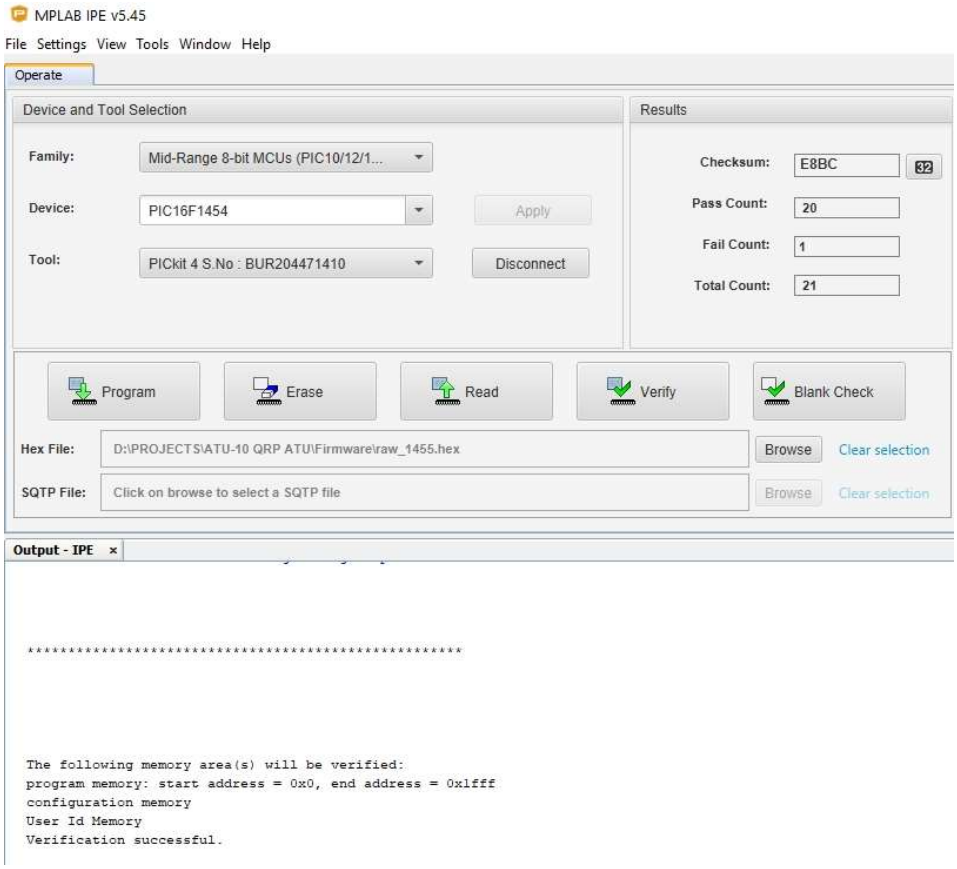

Now fit the PIC16F18877 device. And plug the ATU-10 back into your PC USB. A window should pop up on your PC with a file “README.HTM” Don’t bother to read it, that’s not required.

By now you should have copied the Firmware file from N7DDC’s Github for the latest ATU-10 version. Unzip the ZIP file. Eg “ATU_FW_V12.HEX” (As of writing, the actual latest firmware is V1.3 but the downloaded file just says “ATU-10.HEX”)

Select the .HEX file with your mouse (left mouse click etc) and then paste it (right click) into the Window that popped up with the README.HTM
A new ‘progress bar’ window will pop up for a few seconds and the PIC16F18877 is now programmed! If not, the most likely cause is that the 2 connections from the USB socket and PIC16F18877 have a dry joint.

Unplug the USB cable and connect the OLED display using the cable made as above. ENSURE that the Vcc connection is correct on the OLED and the OLED header pins on the ATU-10.

Plug the USB cable back in and the OLED should spring to life !!

A short press on the front panel button should show “RESET” on the display. A longer press should say “TUNE”.

Now, you need to load the rest of the parts. The relays are a bit tricky as you need to carefully straighten all the pins first using fine tipped needle nosed pliers. I fitted all the relays at once but turning the PCB over, you are bound for many if not all to fall out. Not good. (Ask how I know)

Before turning over, place a piece of scrap PCB over the relays, to hold them all down, turn over the PCB very carefully ensuring no relays fall out. Solder using a long tipped fine tip ONE pin on each of the relays. No need to fill the holes, just make sure the solder seems to wick down into the hole as the relay pins are very short.

Turn the board back over, no relay should fall out but if you observe them carefully they may not all be sitting flat on the PCB. To correct this, stand the PCB vertically with the solder side toward you, place your finger on each relay in turn and re-melt that ONE pin you soldered. The relays should then sit flatter. Repeat for all. ONLY when happy with the fitment, solder the rest of the pins. I repeat, ONLY when happy with fitting, solder the rest of the pins. It won't be easy if you have to remove them.

Now you can wind and fit the toroids and balun core for SWR section. Remember, EACH wire through the toroid is ONE turn. If you want to be pedantic and have an inductance meter, you could measure each inductance before fitting. Not really needed I think.

Fit the BNC connectors. Solder the central pin first then check the connector is at right angles out of the PCB. If nit, heat up the pin and correct. Solder one ground pin and check again. I just soldered two opposite ground pins on my build.

Before fitting the 14500 cells, check the output of the TP4056 at pin 5. It should be about 4-4.2Vdc. Then you can fit a link on J1 header. This connects the Cells to the TP4056.

Once the cells are fitted you can monitor the charge current if you have a USB in-line voltmeter/current meter 'gadget' available on eBay. Charge initially will be about 350-400mA steadily dropping to about 10mA trickle charge.

However, it's best if the cells are both in the same charged condition before fitting if possible. I temporarily fitted each cell in turn to the ATU-10 board and allowed them to fully charge first. i.e. Charge current eventually reduced to about a 10mA trickle rate. Make sure you fit them with the correct polarity! The ones I bought don't have an obvious +ve end. (Use a digital multimeter for this and mark the Positive end to avoid confusion and smoke!) Then fit the now fully charged cells to the board. A piece of stiff copper wire can be used fitted into the PCB and soldered to the cells. To reduce any risk of damage to the cells by soldering them, I bought cells with solder tags on them.

TESTING

Refer to N7DDC's Github page for details of operations.

At this stage it's a good idea to check if all relays actually operate correctly. David, N7DDC, has provided a **test program**, "Relay_Test.ZIP" on his Github page under ATU-10 Firmware, which allows the builder to test operation of each relay in turn, using the button on the front panel to cycle through the relays. Operation of the program is self-explanatory on the OLED screen. Use the same procedure as above, to load this test software.

I won't detail the whole sequence except to briefly say how I verified the relay operation. When you run the test program you need to RESET all relays to the normal condition which is how the contacts are shown on my Schematic. Using an ohm meter in continuity mode (ie buzzer) , place it across the appropriate pins of the relay being tested to see if the relay actually changes state. Repeat for each relay.

Once all relays have been verified for operation, reload the latest Firmware. And…….

Happy tuning

Vk3pe

Just a short note on Parts for this project

I bought a resistor pack from eBay for the 0603 parts. Plenty of them with left overs for your "junk box". If you buy just parts specified in the BOM, make sure you order extra parts. SMD parts have a habit of getting easily lost!

80 Value 4000pcs 0603 SMD SMT 1% 10 ohm -910K ohm RESISTOR Assortment Kit

I didn't check on the 0603 capacitors as I had most of them already. I did though buy the 250v and some other capacitors from Farnell/Element14 but the BOM by N7DDC lists Digikey numbers for most of the parts.

There are world-wide shortages of components, especially IC's and semi-conductors. You may need to do some hunting to find some parts in stock.

Both PIC devices in the packages used on the PCB are readily obtainable from Mouser, Digikey and Farnell (Newark) and maybe Microchips on-line shop.

There are three types of Dual FET devices that can be used. See N7DDC or my BOM.

I bought AO6604 devices from Utsource.com at about US$00.13 each (100) plus shipping.

Relays IM41 are usually available from suppliers above but much cheaper at 10 for US$10 on eBay. Buy 2 lots. Get them as soon as you can as they may run out.

ATU-10 by N7DDC (David), version by Glenn, VK3PE (Sept 5th 2021)

11th Dec 2021 Version 1.3 using 0805 parts instead of 0603.

These notes cover the variations of N7DDC's original ATU-10 PCB. I built up one of the original boards from Gerber files released by David in August 2021.

David's Github (Google "N7DDC Github")

VK3PE's "ATU-10" web page is here

I quickly realised that soldering the two PIC devices will put many off building this QRP ATU.

David never released any Schematic for his project, so I circuit traced the original PCB to come up with my own Schematic version. Now shown as V1.2 & V1.3 on the Schematic depending on which PCB I had made.

Obviously tracing a PCB is subject to errors and the PCB's I built using my Schematic are subject to the condition that **I may have made an error** in the Schematic and PCB.

Then, I altered David's original, by choosing easier to solder footprints for the two PIC devices to come up with a new PCB version. A side benefit of this is that the devices I chose are more easily available.

For the PIC16F18877-I/ML I used **PIC16F1454-I/SL or -E/SL** ie. a *SOIC-14 device.*

And, for the PIC16F18877-E/MV I used **PIC16F18877-I/PT OR -E/PT**, a *TQFP-44 device* (44pins instead of 40pin. In a larger physical device)

This means that U4 & U5 on Sheet 1 of the Sch are NOT used, refer to Sheet 2 for the parts actually used.

Most of the remaining parts are 0805 footprints the various Caps and Resistors.

SMD is still do-able for most homebuilders (I'm 73) as long as you get over the "fear" of SMD parts.

When assembling this V1.3 PCB please note that the USB-Micro pads need to be insulated if the USB_C.
Use Kapton tape or a small piece of normal clear adhesive tape.

VK3PE

Ie The actual schematic is identical to V1.2 and indeed original N7DDC version, just the footprints of the 0603 parts have been altered to 0805 in the V1.3 PCB. Some slight shuffling of locations on the PCB was required to do this.
Dec 11th 2021: A V1.3x PCB has been sourced and built.

The following sheets in this document are:-

- Schematic V1.3
- Bill of Material (BOM) V1.3 derived from the schematic
- Component overlay of the V1.3 PCB showing parts by values.
- Suggested assembly, programming and test information. (Same as V1.3)

73's
Glenn VK3PE

V1.3X

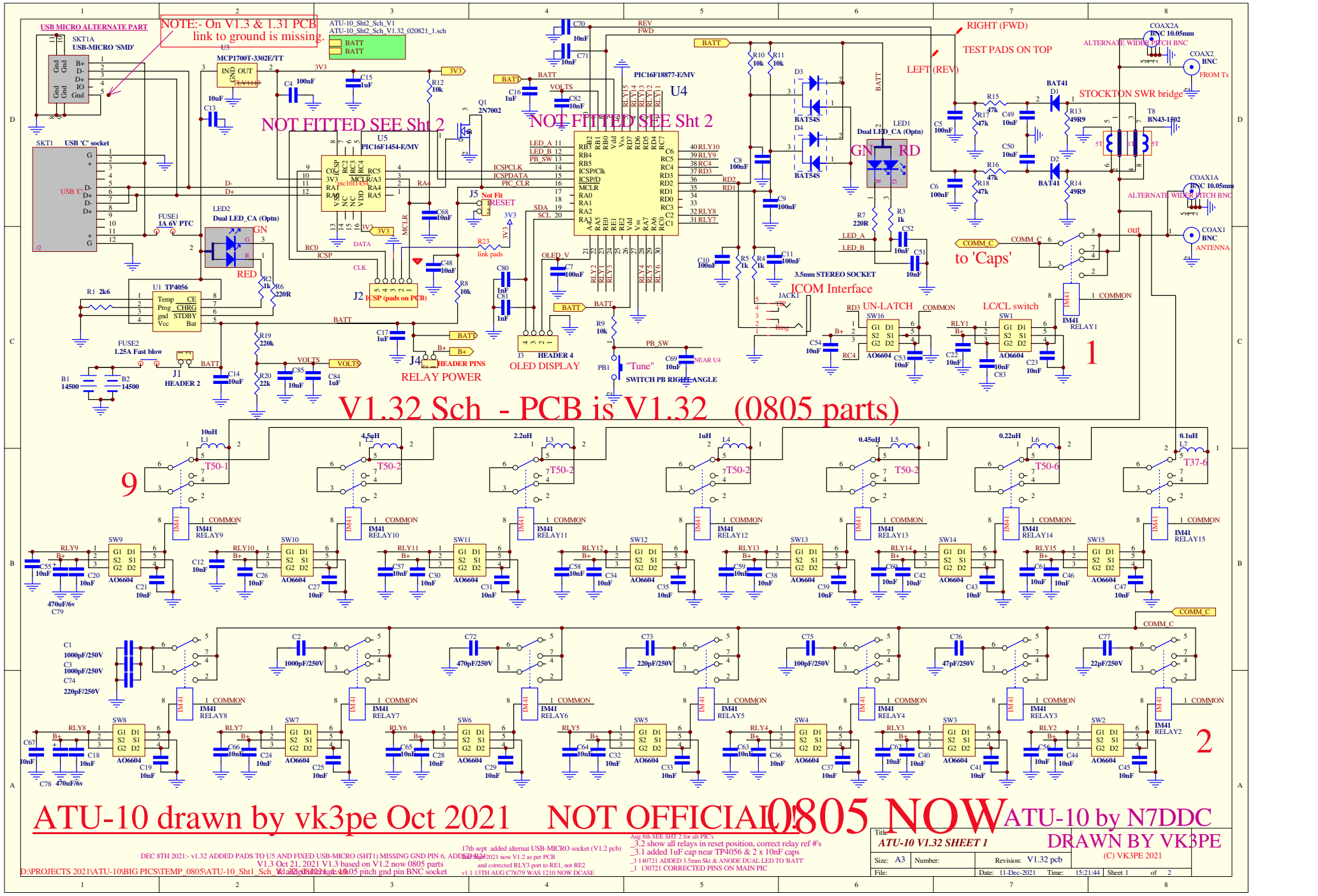

NOTE:- On V1.3 & 1.31 PCB link to ground is missing.
USB MICRO ALTERNATE PART
SKT1A USB-MICRO 'SMD'
ATU-10_Sht2_Sch_V1
ATU-10_Sht2_Sch_V1.32_020821_1.sch
MCP1700T-3302E/TT
NOT FITTED SEE Sht 2
PIC16F1454-E/MV
PIC16F18877-E/MV
U4
U5
Q1 2N7002
SKT1 USB 'C' socket
FUSE1 1A 6V PTC
LED2 Dual LED_CA (Optn)
U1 TP4056
FUSE2 1.25A Fast blow
J1 HEADER 2
J2 ICSP (pads on PCB)
J4 HEADER PINS
RELAY POWER
J3 HEADER 4
OLED DISPLAY
"Tune"
SWITCH PB RIGHT ANGLE
3.5mm STEREO SOCKET
ICOM Interface
LED1 Dual LED_CA (Optn)
GN
RD
RIGHT (FWD)
LEFT (REV)
TEST PADS ON TOP
COAX2A BNC 10.05mm
ALTERNATE WIDER PITCH BNC
COAX2 BNC
FROM Tx
STOCKTON SWR bridge
T8 BN43-1502
COAX1A BNC 10.05mm
COAX1 BNC
ANTENNA
to 'Caps'
UN-LATCH
LC/CL switch
IM41 RELAY1
1
V1.32 Sch - PCB is V1.32 (0805 parts)
9
T50-1
T50-2
T50-6
T37-6
IM41 RELAY9
IM41 RELAY10
IM41 RELAY11
IM41 RELAY12
IM41 RELAY13
IM41 RELAY14
IM41 RELAY15
AO6604
2
ATU-10 drawn by vk3pe Oct 2021
NOT OFFICIAL!
0805 NOW
ATU-10 by N7DDC
DRAWN BY VK3PE
(C) VK3PE 2021
DEC 8TH 2021:- v1.32 ADDED PADS TO U5 AND FIXED USB-MICRO (SHT1) MISSING GND PIN 6, ADDED R24
V1.3 Oct 21, 2021 V1.3 based on V1.2 now 0805 parts
V1.32 Oct 21 2021 v1.3 0.05 pitch gnd pin BNC socket
17th sept added alternat USB-MICRO socket (V1.2 pcb)
Aug 8th SEE SHT 2 for alt PIC's
_3.2 show all relays in reset position, correct relay ref #'s
_3.1 added 1uF cap near TP4056 & 2 x 10nF caps
_3 140721 ADDED 3.5mm Skt & ANODE DUAL LED TO 'BATT'
_1 130721 CORRECTED PINS ON MAIN PIC
Title ATU-10 V1.32 SHEET 1
Size: A3
Number:
Revision: V1.32 pcb
File:
Date: 11-Dec-2021
Time: 15:21:44
Sheet 1 of 2
D:\PROJECTS 2021\ATU-10\BIG PICS\TEMP_0805\ATU-10_Sht1_Sch_V1.32_020821_1.sch

THIS SHEET IS FOR THE ALTERNATE PIC DEVICES I USED ON THE PCB, V1.3

V1.3 Sch - PCB is V1.3 (0805 parts)

NOTE !! U4 & U5 on sheet one are not used.

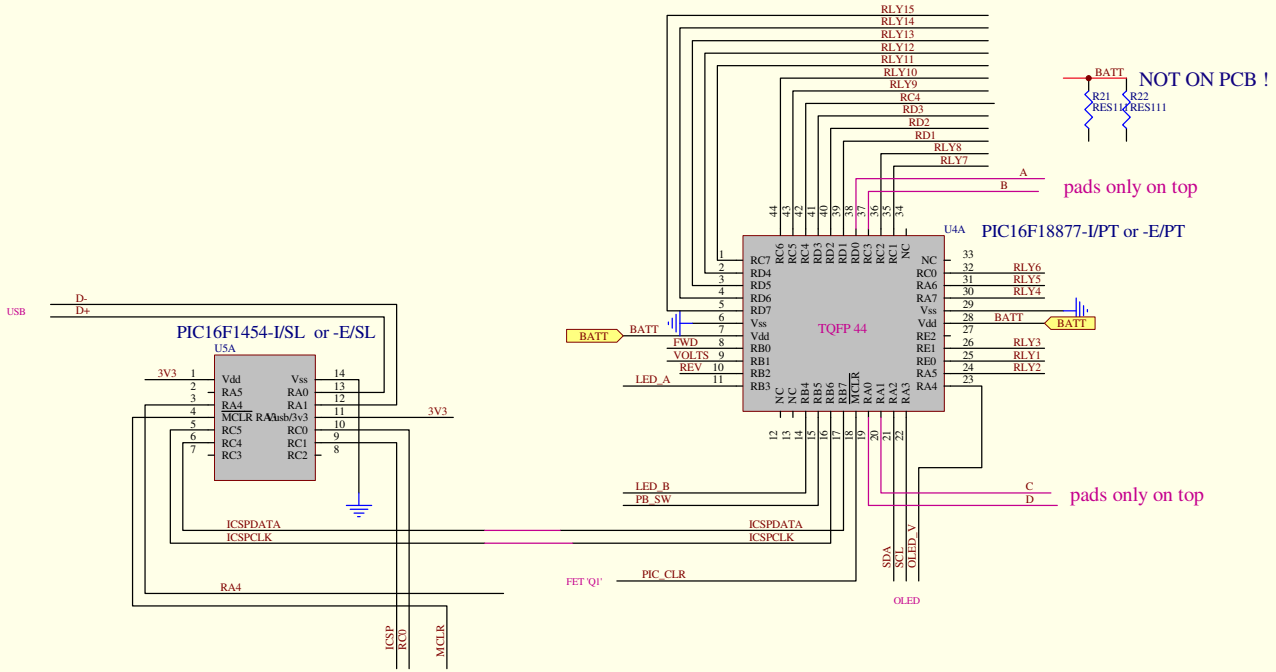

8TH DEC 2021 v1.32 ADDED PADS TO U5 AND FIXED USB-MICRO (SHT1) MISSING GND PIN 5

DRAFT 030821 VK3PE Sept 2021 was V1.2

Oct 21, 2021 V1.3 based on V1.2 now 0805 parts

2nd Sept V1.2 pcb:- fixed port for RLY3 was RE2 now RE1

21th Aug chnaged V3.2 on this page to V1.1 as per PCB

AUG 8th CORRECTED PINOUT TO RLY 4/6 AND 'VOLTS' AND 'REV' PINS

Title: *ALTERNATE 'PIC's' SHEET 2 v1.32*			(C) VK3PE 2021
Size: A3	Number:	Revision: V1.32 pcb	
File:		Date: 11-Dec-2021 Time: 15:22:07	Sheet 2 of 2

D:\PROJECTS 2021\ATU-10\BIG PICS\TEMP_0805\ATU-10_SHT2_SCH_V1.32_020821_1.sch

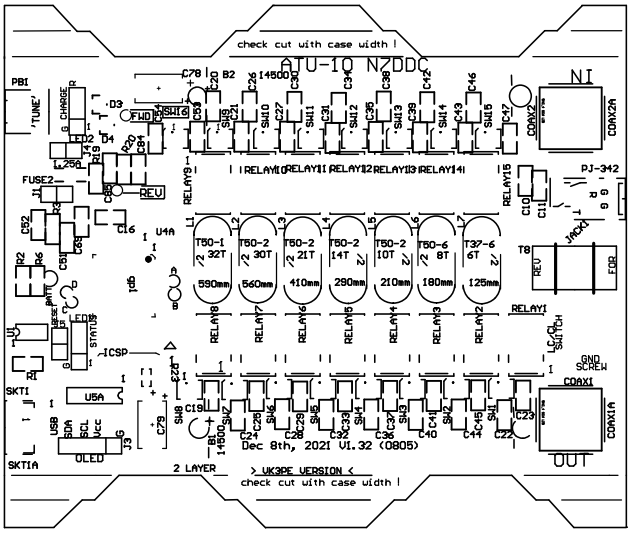

Designator78

vk3pe

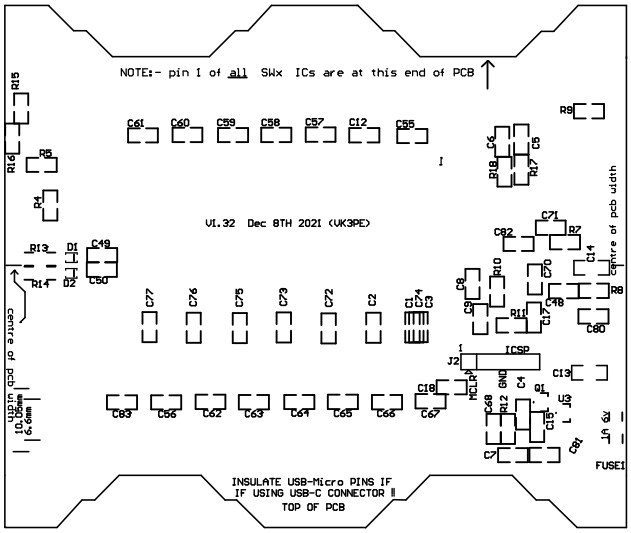
NOTE:- pin 1 of all SWx ICs are at this end of PCB
V1.32 Dec 8TH 2021 (VK3PE)
centre of pcb width
centre of pcb width
10.05mm
6.6mm
ICSP
J2
MCLR
GND
C4
Q1
U3
FUSE1
INSULATE USB-Micro PINS IF
IF USING USB-C CONNECTOR !!
TOP OF PCB

Bill of Material for D:\PROJECTS 2021\ATU-10\BIG PICS\V1.Prj

CAUTION, DO NOT SORT THIS DOCUMENT

27th Oct 2021, C80, C81 were shown as Inductor, corrected to 'Cap'.

Dec 11th 2021 (ON V1.3 or later, 0603 parts now 0805 parts.)

**** BOM FOR ATU-10 PCB USING LARGER PIC DEVICES FOR EASIER SOLDERING, BY VK3PE 5th Oct 2021 ****

(This BOM was derived from the V1.2 PCB Schematic.)

This ATU-10 is based heavily on the original by N7DDC. It was modified to allow use of easier to get and solder, PIC Micros.

%%%% Note all caps 22pF to 1nF rated 250V in tuning section, are COG/NPO types ! %%%%

For PCB by vk3pe Version 1.1 or 1.2

See also vk3pe web pages on this project.
http://www.carnut.info/ATU_N7DDC/ATU-10/ATU-10%20build.html

QTY	Part type	Designator	Footprint	Description	Notes 1	Digikey or	Notes
1	PCB ATU-10 version by vk3pe	Version 1.3 or later		PCB			Kees, K5BCQ, may have PCB's or check for Gerbers.
1	0.1uH	L7	Toroid_ATU-10	Inductor	T37-6 6t 0.5mm	kitsandparts.com etc	* TOROIDS:- various suppliers available, don't use eBay !!!
1	0.22uH	L6	Toroid_ATU-10	Inductor	T37-6 8t 0.5mm	kitsandparts.com etc	
1	0.45uH	L5	Toroid_ATU-10	Inductor	T50-2 10t 0.5mm	kitsandparts.com etc	
1	10uH	L1	Toroid_ATU-10	Inductor	T50-1 32t 0.5mm	kitsandparts.com etc	
1	1uH	L4	Toroid_ATU-10	Inductor	T50-2 14t 0.5mm	kitsandparts.com etc	
1	2.2uH	L3	Toroid_ATU-10	Inductor	T50-2 21t 0.5mm	kitsandparts.com etc	
1	4.5uH		Toroid_ATU-10	Inductor	T50-2 30T 0.5mm	kitsandparts.com etc	
1	1Amp 6v PTC	Fuse1	1206		Farnell 2848541	DIGIKEY 507-1806-1-ND	
1	1.25A Fast blow	Fuse 2	1206	Fuse	Farnell 2834836	DIGIKEY 507-1879-1-ND	
3	1000pF/250V COG/NPO	C1 C2 C3	0805	Cap		DIGIKEY 445-15299-1-ND	
8	100nF	C10 C11 C4 C5 C6 C7 C8 C9	0603 (0805 on v1.3 OR LATER)	Cap			
1	100pF/250V COG/NPO	C75	0805	Cap		DIGIKEY 1284-1860-1-ND	
5	10k	R10 R11 R12 R8 R9	'0603 (0805 on v1.3 OR LATER)	Resistor			
58	10nF	C12 C18 C19 C20 C21	'0603 (0805 on v1.3 OR LATER)	Cap			
	10nF	C22 C23 C24 C25 C26	'0603 (0805 on v1.3 OR LATER)	Cap			
	10nF	C27 C28 C29 C30 C31	'0603 (0805 on v1.3 OR LATER)	Cap			
	10nF	C32 C33 C34 C35 C36	'0603 (0805 on v1.3 OR LATER)	Cap			
	10nF	C37 C38 C39 C40 C41	'0603 (0805 on v1.3 OR LATER)	Cap			
	10nF	C42 C43 C44 C45 C46	'0603 (0805 on v1.3 OR LATER)	Cap			
	10nF	C47 C48 C49 C50 C51	'0603 (0805 on v1.3 OR LATER)	Cap			
	10nF	C52 C53 C54 C55 C56	'0603 (0805 on v1.3 OR LATER)	Cap			
	10nF	C57 C58 C59 C60 C61	'0603 (0805 on v1.3 OR LATER)	Cap			
	10nF	C62 C63 C64 C65 C66	'0603 (0805 on v1.3 OR LATER)	Cap			
	10nF	C67 C68 C69 C70 C71	'0603 (0805 on v1.3 OR LATER)	Cap			
	10nF	C82 C83 C85	'0603 (0805 on v1.3 OR LATER)	Cap			
2	10uF	C213, C14	1206	Cap	remove from TP4056 module eBay		eBay 1S charger (check it contains TP4056, most do.)
2	14500 Li-Ion cell	B1, B2	14500	single cell	14500 3.7V CELL		eBay & others
4	1k	R2 R3 R4 R5	'0603 (0805 on v1.3 OR LATER)	Resistor			
2	1nF	C80 C81	'0603 (0805 on v1.3 OR LATER)	Cap			
4	1uF	C15 C16 C17 C84	'0603 (0805 on v1.3 OR LATER)	Cap			
1	220k 1%	R19	'0603 (0805 on v1.3 OR LATER)	Resistor			
2	220pF/250V COG/NPO	C73 C74	0805	cap		DIGIKEY 720-1347-1-ND	
2	220R (220ohms) 1% is better	R6 R7	'0603 (0805 on v1.3 OR LATER)	Resistor			
1	22k	R20	'0603 (0805 on v1.3 OR LATER)	Resistor			
1	22pF/250V COG/NPO	C77	0805	Cap		DIGIKEY 1284-1353-1-ND	
1	2K6 (2K7)	R19	'0603 (0805 on v1.3 OR LATER)	Resistor			
1	2N7002	Q1	SOT-23	fet		2N7002	
1	3.5mm STEREO SOCKET	JACK1	(3.5MM SOCKET)	SOCKET	PJ-342, PJ-311D	eBay, ALIEXPRESS ETC	straighten the pins to insert into PCB
1	470pF/250V COG/NPO	C72	0805	Cap		DIGIKEY 399-15869-1-ND	
2	470uF/6V CAP	C78 C79	DCASE	Cap		DIGIKEY 399-4701-1-ND	
4	47k	R15 R16 R17 R18	'0603 (0805 on v1.3 OR LATER)	Resistor			
1	47pF/250V COG/NPO	C76	0805	Cap		DIGIKEY 1284-1062-1-ND	
2	49R9 (49.9 OHM)	R13 R14	1206				
16	A06604	SW1 SW10 SW11 SW12	SOT-23-6	DUAL FET		AO06604 Digikey 785-1078-1-nd	try also Utsource.com (Kees, K5BCQ may have some available)
	A06604	SW13 SW14 SW15 SW16	SOT-23-6	DUAL FET			
	A06604	SW2 SW3 SW4 SW5 SW6	SOT-23-6	DUAL FET			
	A06604	SW7 SW8 SW9	SOT-23-6	DUAL FET			
2	BAT41FILM	D1 D2	SOD	Diode		DIGIKEY 497-7669-1-ND	

2	BAT54S	D3 D4	SOT-23	Diode		DIGIKEY 846-BAT54SHMT116CT-ND	
1	BN43-1502 BALUN CORE	T8	'SWR'	CORE	ALT. PART BN43-202 ?		0.4mm Copper WIRE required (not critical)
2	BNC Right ANGLE SKT	COAX1 COAX2	BNC_RA	BNC socket	5-1634513-1	DIGIKEY A97569-ND	eBay, Aliexpress, etc
2	DUAL LED COMMON ANODE	LED1 LED2	SIP3	3PIN HEADER	DUAL LED COMMON ANODE		OPTIONAL IF OLED NOT USED need 2 x 3 pin headers
1	HEADER 2 PINS 0.1" pitch	J1	SIP2	male pins			eBay have these in 40pin rows. Cut as required
1	HEADER 4 PINS 0.1" pitch	J3	SIP4	male pins			eBay have these in 40pin rows. Cut as required
1	HEADER 2 PINS 0.1" pitch	J4	SIP2	male pins	OLED 0.91" 128x32	eBay and other suppliers	make short cable for OLED using 2 x 4pin header female
1	ICSP provision	J2		PADS ON PCB !			to program PIC16545 with Pickit or equivalent
15	IM41 latching relays 3v	RELAY1 RELAY10	"IM41" footprint	eBay have them	latching relays	eBay, Digikey, Mouser etc	NOTE pins to be straightened for fitting
	IM41 latching relays 3v	RELAY11 RELAY12	"IM41" footprint	10 for $10	latching relays	eBay, Digikey, Mouser etc	NOTE pins to be straightened for fitting
	IM41 latching relays 3v	RELAY13 RELAY14	"IM41" footprint	buy 2 lots.	latching relays	eBay, Digikey, Mouser etc	NOTE pins to be straightened for fitting
	IM41 latching relays 3v	RELAY15 RELAY2	"IM41" footprint		latching relays	eBay, Digikey, Mouser etc	NOTE pins to be straightened for fitting
	IM41 latching relays 3v	RELAY3 RELAY4 RELAY5	"IM41" footprint		latching relays	eBay, Digikey, Mouser etc	NOTE pins to be straightened for fitting
	IM41 latching relays 3v	RELAY6 RELAY7 RELAY8 RELA	"IM41" footprint		latching relays	eBay, Digikey, Mouser etc	NOTE pins to be straightened for fitting
1	MCP1700T-3302E/TT (3v3 Reg)	U3	SOT-23	3V3 REGULATOR		AP2125N-3.3TRG1DICT-ND	AP2138N-3.3TRG1DICT-ND
1	PIC16F1454-I/SL or -E/SL	U5A	SOIC-14		Farnell 2564170 ???	PIC16F1454--I/SL or -E/SL	DIGIKEY, MOUSER, Newark, Element14/Farnell etc
1	PIC16F18877-I/PT or -E/PT	U4A	TQFP_44		Farnell	PIC16F18877-I/PT or -E/PT	DIGIKEY, MOUSER, Newark, Element14/Farnell etc
1	SWITCH PB RIGHT ANGLE	PB1			RIGHT ANGLE PB SW. EVQ-PF106K	DIGIKEY P10883S-ND	
1	TP4056 (Li-Ion charger IC)	U1	SOIC-8	Li-Ion CHGR.	TP4056 (REMOVED FROM eBay MODULE)		
1	USB 'C' socket	SKT1 **or:-**	USB_C		USB 'C' smd Mtg. 12 PIN	DIGIKEY 2073-USB4105-GF-ACT-ND	
1	USB-MICRO 'SMD'	SKT1A (alternate part)	USB_MICRO		**Alternate 'Micro' style USB**	DIGIKEY:- 732-3155-1-ND	* alternate USB-Micro type on V1.2 pcb (NOT on V1.1)
-	NOT FITTED	J5			"RESET"		
0	*PIC16F1454-E/MV*	*U5 NOT FITTED*	*NOT USED*		*PIC16F1454-I/MV*	*PIC16F1454-I/MV*	*PIC16F1454-E/MV not fitted !*
0	*PIC16F18877-E/MV*	*U4 NOT FITTED*	*NOT FITTED UQFN_40_*		*PIC16F18877-E/MV ('I/MV' OK TOO)*	*PIC16F18877-E/MV ('I/MV' OK TOO)*	*NOT FITTED !!!*
NA	link	R23	may need to be linked to use PIC16F1454 programmer			or:- Mouser 710-629105136821	
1	Case 3 types suitable	1) 100x71x25mm 2) 100x82mm 3) 100x88mm			**PCB must be cut to fit case options 1) & 2)**	eBay, Aliexpress, Amazon etc	V1.1 pcb only fits 71mm case, V1.2 suits all cases listed.
1	Front and rear panels drilled and cut to suit. (NOT available from vk3pe but drawing will be available soon.)						
2	header jumper skts for J1 & J4	caution, don't fit these parts initially.					
	External coax cables from Tx and antenna required, also if used with ICOM IC-705 then a male to male 3.5mm stereo cable is required						

This is a preface to the suggested assembly document which follows.

References to V1.2 should be replaced with V1.3x. The only difference is that in V1.3, all 0603 parts were replaced by 0805 parts.

Vk3pe

ATU-10 (vk3pe) PCB assembly. (8th Oct 2021)

Intro:

This PCB is based on the ATU-10 board designed by N7DDC. The only variation for the boards by vk3pe is that the two PIC devices are now a larger physical type. This achieves two things:

1. Easier to find parts. Both devices are in reasonable supply from the usual outlets at time of writing. The originals are impossible find.
2. Easier to solder. Being larger and with wider spaced pins, means both are much easier to solder down.

The PCB is designated Version "1.2". It was designed by circuit tracing the original PCB by N7DDC in August of 2021. Since there was never an official Schematic ever available from N7DDC, then it must be accepted that there might be some errors. However, having built two PCB's, there have been no faults found in this version.

N7DDC has released a relay test program which enables the finished board to be tested to confirm that all the relays operate as expected. It is highly recommended to use this program before putting the ATU into service. N7DDC's information on this project is at his Github. Goto the Firmware section for the test program and the other Files required.

Assembly:

This is not a part by part assembly document although it seems I wrote more than I intended! It assumes some basic knowledge at least of reading Schematics, finding parts references in the Bill of Material and soldering skills. Not mention sourcing all the parts needed. I have also provided an overlay of the PCB showing parts by value. There is no need to be frightened of smd assembly if this is your first attempt at it. In fact it's recommended that builders checks out various YouTube videos on this subject before assembling this PCB if you have no smd experience. You only need basic tools. No ovens, heat guns etc are needed.

In the shack here, a 20+year old Hakko926 soldering iron is used, but with a very fine pointed tip. Don't use some old tip you have been using for some time, get a fresh one. Tweezers are needed to pick up the parts. Plus the usual small hand tools. A magnified desk lamp or headset are handy. Make sure you have spares of the smaller parts, as sometimes you may lose them from the tweezers and they are stupidly hard to find on the floor!

The Case

The V1.2 PCB was designed to suit three different case types. 100x71mm as per N7DDC original, 100x82mm or 100x88mm. There are lines marked on the PCB which designate where the board should be cut to suit each case size.

- For the 100x71mm case, cut the tabs off entirely. It is prudent though to cut a little less and check with the actual case you have.
- For the 100x82mm case, the V1.2 PCB markings are INCORRECT due to not having an actual case to check the sizing at the time. The case only arrived on the 6th Oct 2021 and is narrower internally than though. Actual width to cut the PCB should be 75.5mm. This is about 1.5mm on the inside of the central cut marks on each tab on both sides of the V1.2 PCB, but measure first against your case.

The PCB will be updated to V1.21 to correct the cut line for 82mm case.

- For the 100x88mm case, no case is available here either so check carefully. Kees, K5BCQ reports no problems with the 88mm wide case though.

The PCB must be cut before any assembly begins. Repeat: check your case BEFORE cutting the PCB !

Recommended assembly sequence:

It's prudent not to fit the PICs or dual FET devices, before testing the 3v3 regulator first. Assemble all the small components around the regulator area, the TP4056 (no 14500 cells yet) and then check the regulator actually outputs 3.3v or close to it. Plug in the USB cable to the PCB and your PC and with a voltmeter, check that the regulator output is actually 3.3v. If not, find the problem.

Only then can you proceed with other parts. Fit the dual FET devices first as its difficult to fit them if the capacitors adjacent to them are fitted. Note there is a tiny 'dot' on the PCB which designates pin 1 of the FET. When you fit the FET make sure it's dot aligns with the PCB dot. It can be very hard to see the dot on the FET. I suggest only soldering ONE pin of each FET so you can double check orientation again. You may need a magnifier and try the FET at different angles to see the dot. (The BAT41 diodes are similar, hard to see the bar at the cathode end)

Then you can fit all the other parts except the relays, toroids, SWR ferrite and BNC sockets. Fit the header pins for the OLED and J1 & J4. (J5 is not fitted.) Don't fit the links on J1 & J4 yet. Unless you are going to use the dual LED's, don't bother fitting LED1 & LED2 header pins. Wait until the end of the build to fit the 3.5mm socket. You need to carefully straighten the pins on the socket with pliers to fit into the PCB.

If using the OLED display, a short cable will be needed to connect it to the PCB. In this build, header pins were fitted to the OLED also so a short cable with header receptacles (socket) needs to be made. This is the cable used, assuming use of a standard case. It's a good idea to identify the "Vcc" wire in the cable so that you orient the cable correctly on the OLED and PCB. I used red heat shrink as you can see. The cable is made from an offcut from a piece of ribbon cable. This is the cable for the standard 71mm wide case. Other cases may require a longer cable.

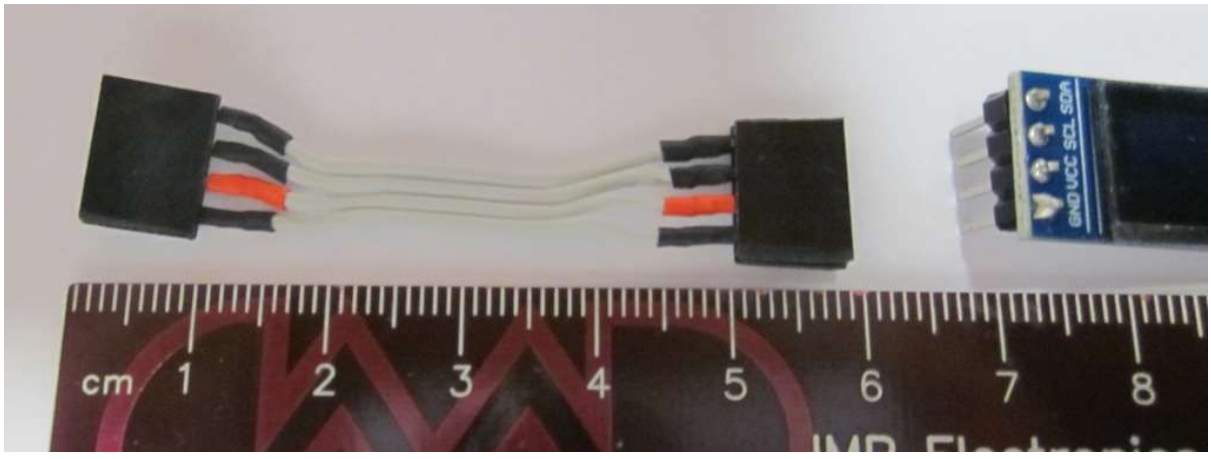

Then you can fit the PIC16F1454 device. It's a SOIC-14 footprint and easy to solder, use a minimum of solder though. DON'T fit the other PIC yet. Check orientation.

Programming the Firmware

Now the PIC can be programmed. You will need a Pickit3 or Pickit4 or equivalent which can be found on eBay etc. The Pickit2 might work, I don't know.

This is a typical "clone Pickit3"

Connect the programmer to the ICSP pins. Observe the pin numbers, pin 1 of the Pickit (white triangle) goes to pin 1 of the ICSP connector on the board which is marked with a "1". (It's also a square pad) Note pin 6 is not used. I just fit header pins in the holes without soldering them as it's only needed once. Maintain a bit of sideways pressure on the pins to ensure contact while programming.

Plug the Pickit into the ATU-10 ICSP as above using a USB port on your PC.

Plug another USB cable into your PC and into the ATU-10.

Run the AP, Microchips "MPLAB X IPE v5.45" (earlier versions might also work.) available from the Microchip web site.

Select the PIC16F1454 as below: (down the page)

Click on the "Connect" button and you should see a dialogue with 'connected' shown. Ie the PIckit is connected.

Click on the "Browse" button and navigate to the "raw_1454.hex" file on your PC. (Downloaded from Github)

Click on the "ERASE" Button, wait a few seconds, then "PROGRAM". After a few period, the PIC16F1454 should be programmed. You only ever need to do this once as all updates after this to Firmware are done via a copy/paste, details below which is below.

Disconnect the USB cable.

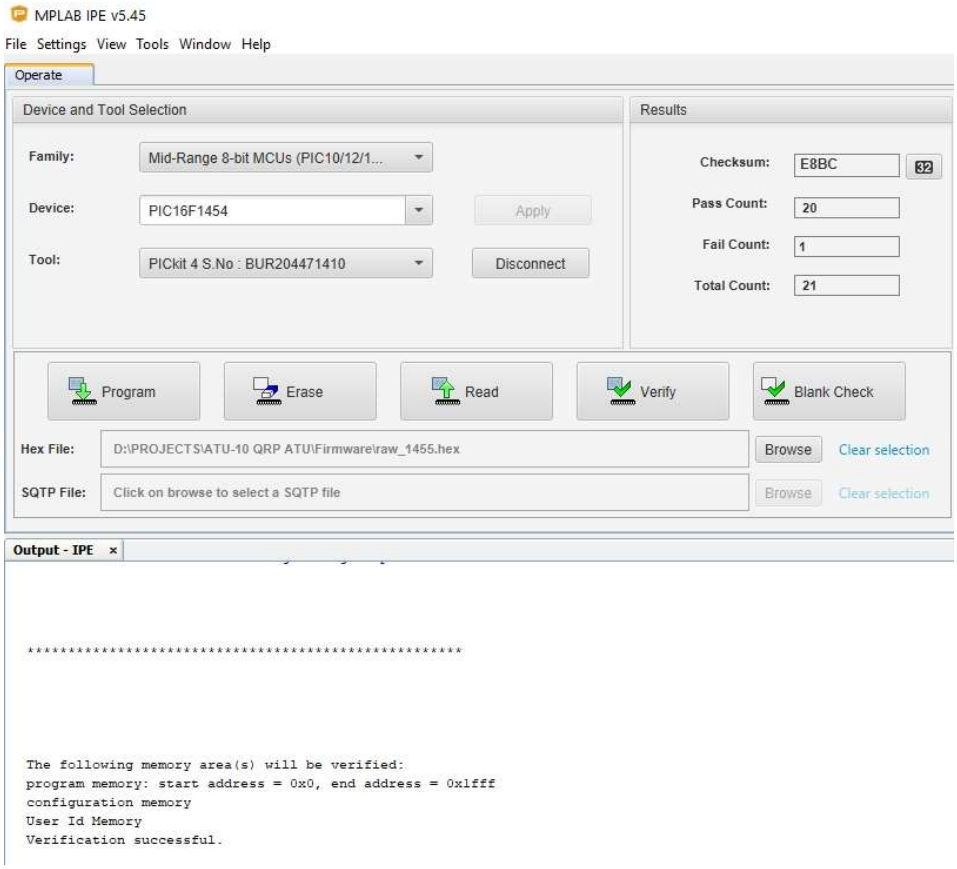

Now fit the PIC16F18877 device. And plug the ATU-10 back into your PC USB. A window should pop up on your PC with a file “README.HTM” Don’t bother to read it, that’s not required.

By now you should have copied the Firmware file from N7DDC’s Github for the latest ATU-10 version. Unzip the ZIP file. Eg “ATU_FW_V12.HEX” (As of writing, the actual latest firmware is V1.3 but the downloaded file just says “ATU-10.HEX”)

Select the .HEX file with your mouse (left mouse click etc) and then paste it (right click) into the Window that popped up with the README.HTM
A new ‘progress bar’ window will pop up for a few seconds and the PIC16F18877 is now programmed! If not, the most likely cause is that the 2 connections from the USB socket and PIC16F18877 have a dry joint.

Unplug the USB cable and connect the OLED display using the cable made as above. ENSURE that the Vcc connection is correct on the OLED and the OLED header pins on the ATU-10.

Plug the USB cable back in and the OLED should spring to life !!

A short press on the front panel button should show “RESET” on the display. A longer press should say “TUNE”.

Now, you need to load the rest of the parts. The relays are a bit tricky as you need to carefully straighten all the pins first using fine tipped needle nosed pliers. I fitted all the relays at once but turning the PCB over, you are bound for many if not all to fall out. Not good. (Ask how I know)

Before turning over, place a piece of scrap PCB over the relays, to hold them all down, turn over the PCB very carefully ensuring no relays fall out. Solder using a long tipped fine tip ONE pin on each of the relays. No need to fill the holes, just make sure the solder seems to wick down into the hole as the relay pins are very short.

Turn the board back over, no relay should fall out but if you observe them carefully they may not all be sitting flat on the PCB. To correct this, stand the PCB vertically with the solder side toward you, place your finger on each relay in turn and re-melt that ONE pin you soldered. The relays should then sit flatter. Repeat for all. ONLY when happy with the fitment, solder the rest of the pins. I repeat, ONLY when happy with fitting, solder the rest of the pins. It won't be easy if you have to remove them.

Now you can wind and fit the toroids and balun core for SWR section. Remember, EACH wire through the toroid is ONE turn. If you want to be pedantic and have an inductance meter, you could measure each inductance before fitting. Not really needed I think.

Fit the BNC connectors. Solder the central pin first then check the connector is at right angles out of the PCB. If nit, heat up the pin and correct. Solder one ground pin and check again. I just soldered two opposite ground pins on my build.

Before fitting the 14500 cells, check the output of the TP4056 at pin 5. It should be about 4-4.2Vdc. Then you can fit a link on J1 header. This connects the Cells to the TP4056.

Once the cells are fitted you can monitor the charge current if you have a USB in-line voltmeter/current meter 'gadget' available on eBay. Charge initially will be about 350-400mA steadily dropping to about 10mA trickle charge.

However, it's best if the cells are both in the same charged condition before fitting if possible. I temporarily fitted each cell in turn to the ATU-10 board and allowed them to fully charge first. i.e. Charge current eventually reduced to about a 10mA trickle rate. Make sure you fit them with the correct polarity! The ones I bought don't have an obvious +ve end. (Use a digital multimeter for this and mark the Positive end to avoid confusion and smoke!) Then fit the now fully charged cells to the board. A piece of stiff copper wire can be used fitted into the PCB and soldered to the cells. To reduce any risk of damage to the cells by soldering them, I bought cells with solder tags on them.

TESTING

Refer to N7DDC's Github page for details of operations.

At this stage it's a good idea to check if all relays actually operate correctly. David, N7DDC, has provided a **test program**, "Relay_Test.ZIP" on his Github page under ATU-10 Firmware, which allows the builder to test operation of each relay in turn, using the button on the front panel to cycle through the relays. Operation of the program is self-explanatory on the OLED screen. Use the same procedure as above, to load this test software.

I won't detail the whole sequence except to briefly say how I verified the relay operation. When you run the test program you need to RESET all relays to the normal condition which is how the contacts are shown on my Schematic. Using an ohm meter in continuity mode (ie buzzer) , place it across the appropriate pins of the relay being tested to see if the relay actually changes state. Repeat for each relay.

Once all relays have been verified for operation, reload the latest Firmware. And…….

Happy tuning

Vk3pe

Just a short note on Parts for this project

I bought a resistor pack from eBay for the 0603 parts. Plenty of them with left overs for your "junk box". If you buy just parts specified in the BOM, make sure you order extra parts. SMD parts have a habit of getting easily lost!

80 Value 4000pcs 0603 SMD SMT 1% 10 ohm -910K ohm RESISTOR Assortment Kit

I didn't check on the 0603 capacitors as I had most of them already. I did though buy the 250v and some other capacitors from Farnell/Element14 but the BOM by N7DDC lists Digikey numbers for most of the parts.

There are world-wide shortages of components, especially IC's and semi-conductors. You may need to do some hunting to find some parts in stock.

Both PIC devices in the packages used on the PCB are readily obtainable from Mouser, Digikey and Farnell (Newark) and maybe Microchips on-line shop.

There are three types of Dual FET devices that can be used. See N7DDC or my BOM.

I bought AO6604 devices from Utsource.com at about US$00.13 each (100) plus shipping.

Relays IM41 are usually available from suppliers above but much cheaper at 10 for US$10 on eBay. Buy 2 lots. Get them as soon as you can as they may run out.