ED SKELTONS TRANSCEIVER book, PAGE 7 - BALANCED MOD >> now MC1496 V2.0

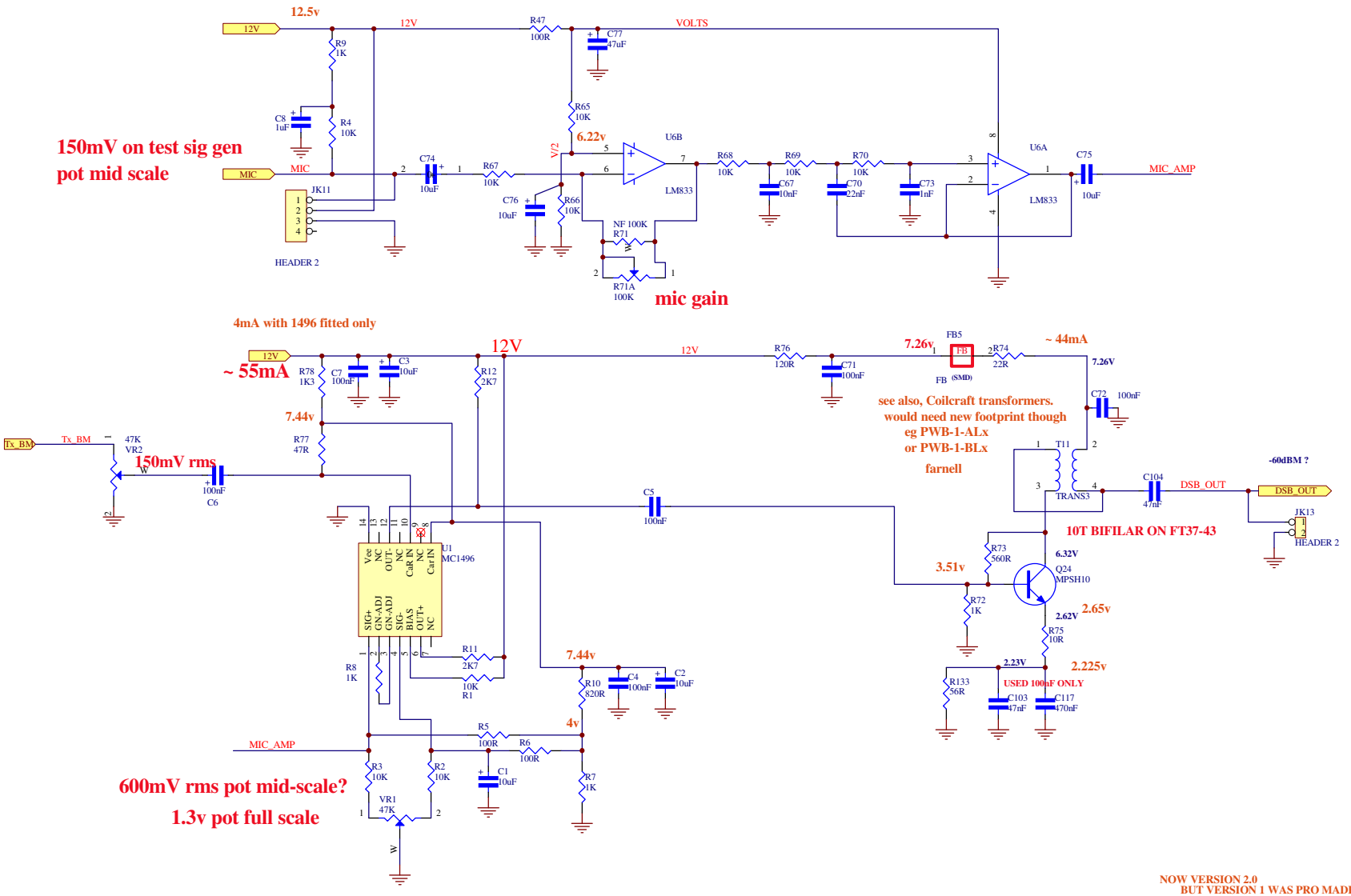

NOW VERSION 2.0
BUT VERSION 1 WAS PRO MADE AND TESTED
260418 RF AND AF WERE SWAPPED ON THE SCH !!
APRIL 19TH 2018
BALANCED_MODULATOR_MC1496_1.PCB
MAR 2018

FOOTPRINTS

Title		DRAWN BY: VK3PE
Size: A3	Date: 10-Jun-2018 Time: 10:22:51	Sheet 7 of 8

E:\PROJECTS 2017\TRANSCEIVER DIY\BAL-MOD MC1496\BALANCED_MODULATOR_MC1496_2.sch

(C) 2007-2018 and on