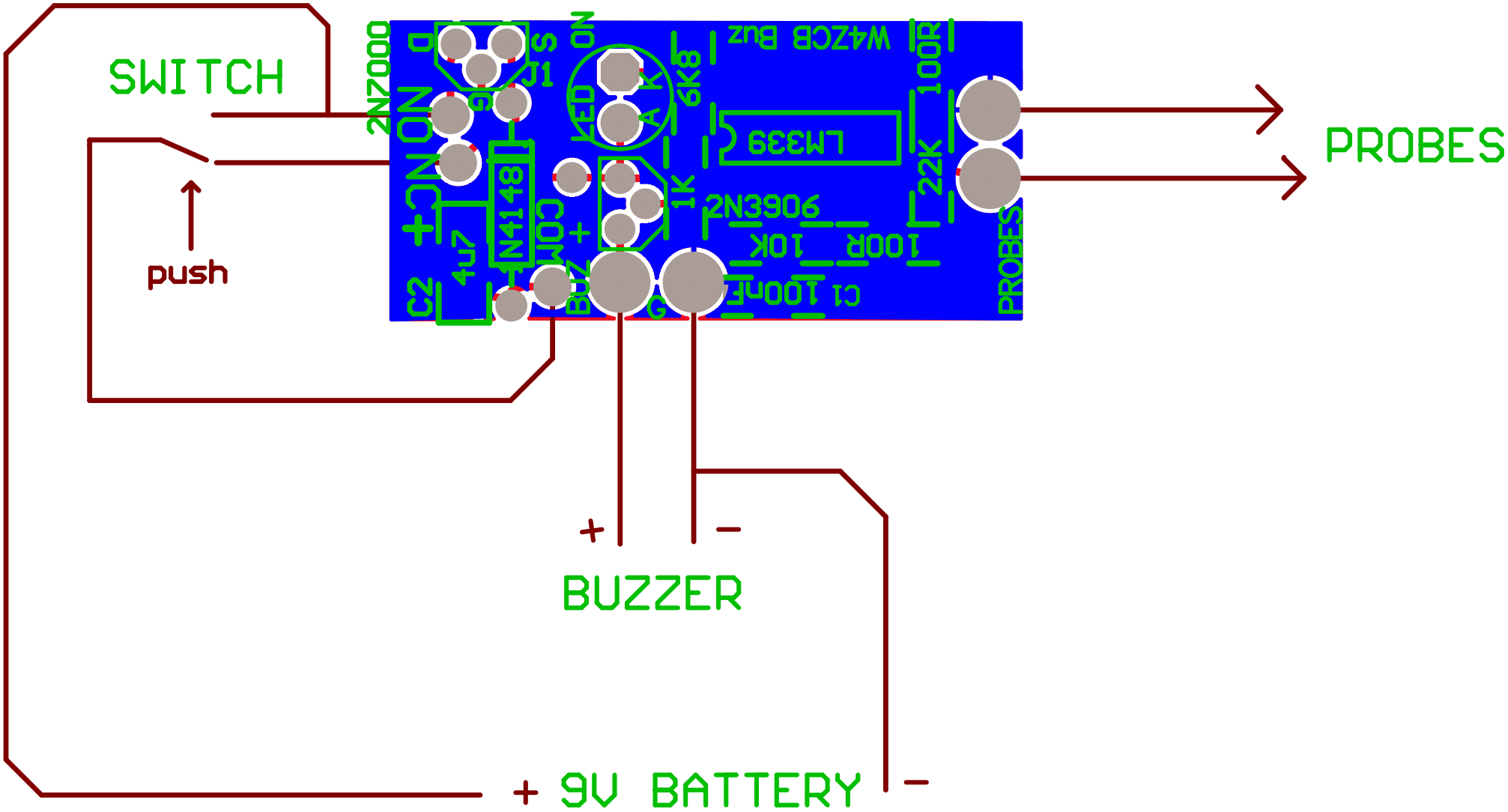BEEPER WITH AUTO OFF