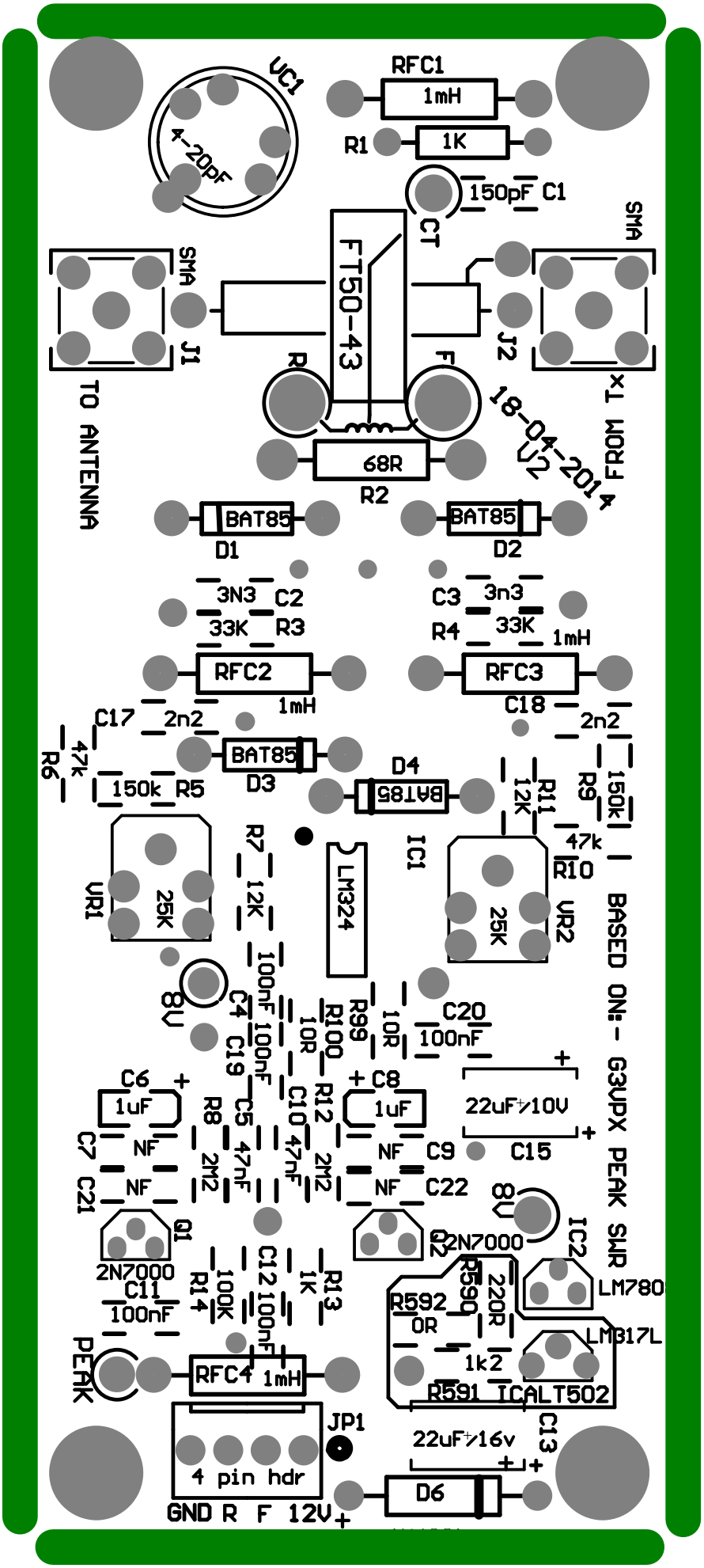
VC1
4-20pF
RFC1
1mH
R1
1K
150pF C1
CT
FT50-43
SMA
J1
SMA
J2
R
F
TO ANTENNA
FROM TX
18-04-2014
68R
R2
BAT85
D1
BAT85
D2
3N3 C2
33K R3
C3 3n3
R4 33K
RFC2
1mH
RFC3
1mH
C17 2n2
R6 47k
150k R5
BAT85
D3
D4
BAT85
C18 2n2
R9 150k
R11 12K
R10 47k
VR1
25K
R7 12K
LM324
IC1
VR2
25K
BASED ON:- G3VPX PEAK SWR
8V
C4 100nF
C19 100nF
R100 10R
R99 10R
C20 100nF
C6 1uF
NF
C7
C21
R8 2M2
C5 47nF
C10 47nF
R12 2M2
C8 1uF
NF C9
NF C22
22uF/10V
C15
8V
Q1
2N7000
Q2
2N7000
IC2
LM780
C11 100nF
R14 100K
C12 100nF
R13 1K
R592 0R
R590 220R
R591 1k2
LM317L
ICALT502
C13
22uF/16v
PEAK
RFC4 1mH
JP1
4 pin hdr
GND R F 12V
D6