Comment
vc3pe
1N4001
10uF
PWR
2K
LED
PWR
100nF
10uF
ESP32 -32D
IC-705 TO BT
V3 181125
BAND SWITCHING
G
V-OUT
15
17
20
30
40
60
80
160
HEADER 10
10uF
100nF
ESP32_WROOM_32D (MODULE)
IO25
G
3V3
100nF
1uF
MCP2301/-E/SO
10k
10k
10K
10K
HEADER 8
G
UHF
12V
5V
6M
ALL
PTT
HF
G
LED
HF PTT
3K3
100nF
10K
4k7
LED
IO2
IO5
12V
70CH
S1
S2
V-OUT
G
SW12V
GND
12V
HF PTT
HEADER 2
G +12DC IN
SEL V
HEADER 3
12V
EXT
EXT V
HEADER 2
ADR
HEADER 2
HEADER 2
12
10
6
4
2M
BAND SWITCHING
HEADER 10
FOR G6ALU PA
HEADER 6
3V3
5V G
RES
HEADER 5
10K?
10K?
IO17
IO16
HEADER 4
SW-PB
BOOT
SPARE
RES1
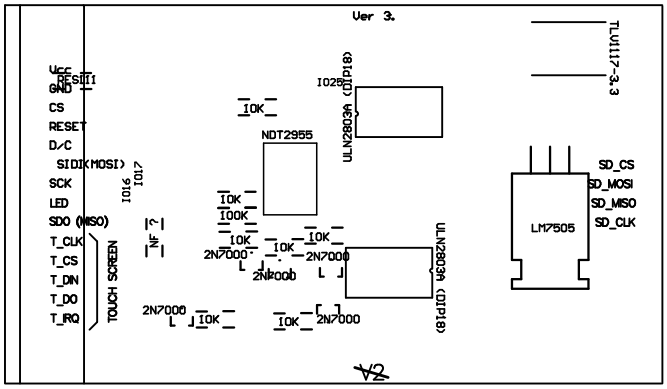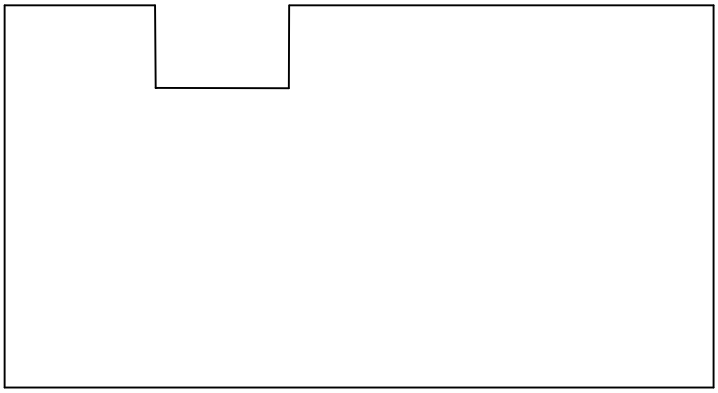
TFT_ILI9341 BOARD