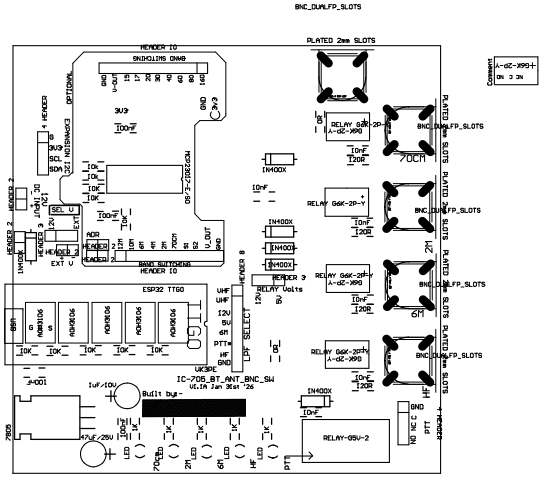
BNC_DUALFP_SLOTS
PLATED 2mm SLOTS
HEADER 10
SWITCHING GND
GND
V-OUT
T1
T2
R1
R2
R3
R4
R5
R6
T4
GND
3V3
OPTIONAL
3V3
100nF
SCL
SDA
I2C INTERFACE
HEADER 2
I2C INPUT
10K
10K
10K
10K
100nF
SEL V
12V
EXT
EXT V
ADR
HEADER 3
HEADER 2
HEADER 1
HEADER 4
HEADER 5
HEADER 6
HEADER 7
HEADER 8
HEADER 9
HEADER 10
BAND SWITCHING
HEADER 10
ESP32 TTGO
IO
IO
I

PLATED 3mm SLOTS
PLATED 3mm SLOTS
PLATED 3mm SLOTS
PLATED 3mm SLOTS
PLATED 3mm SLOTS
PLATED 3mm SLOTS
PLATED 3mm SLOTS
PLATED 3mm SLOTS
18mm SPACING
ULN2803A (DIP16)
ULN2803
HEADER 4
IC-705 BLUETOOTH ANTENNA SELECTOR
Jan 5th 2026 v1
Jan 16TH 2026 v1.1
VK3PJE
APROX 7.8mm
DECODE_BNC_SW.PCB

PLATED 2mm SLOTS
PLATED 2mm SLOTS
PLATED 2mm SLOTS
PLATED 2mm SLOTS
PLATED 2mm SLOTS
PLATED 2mm SLOTS
PLATED 2mm SLOTS