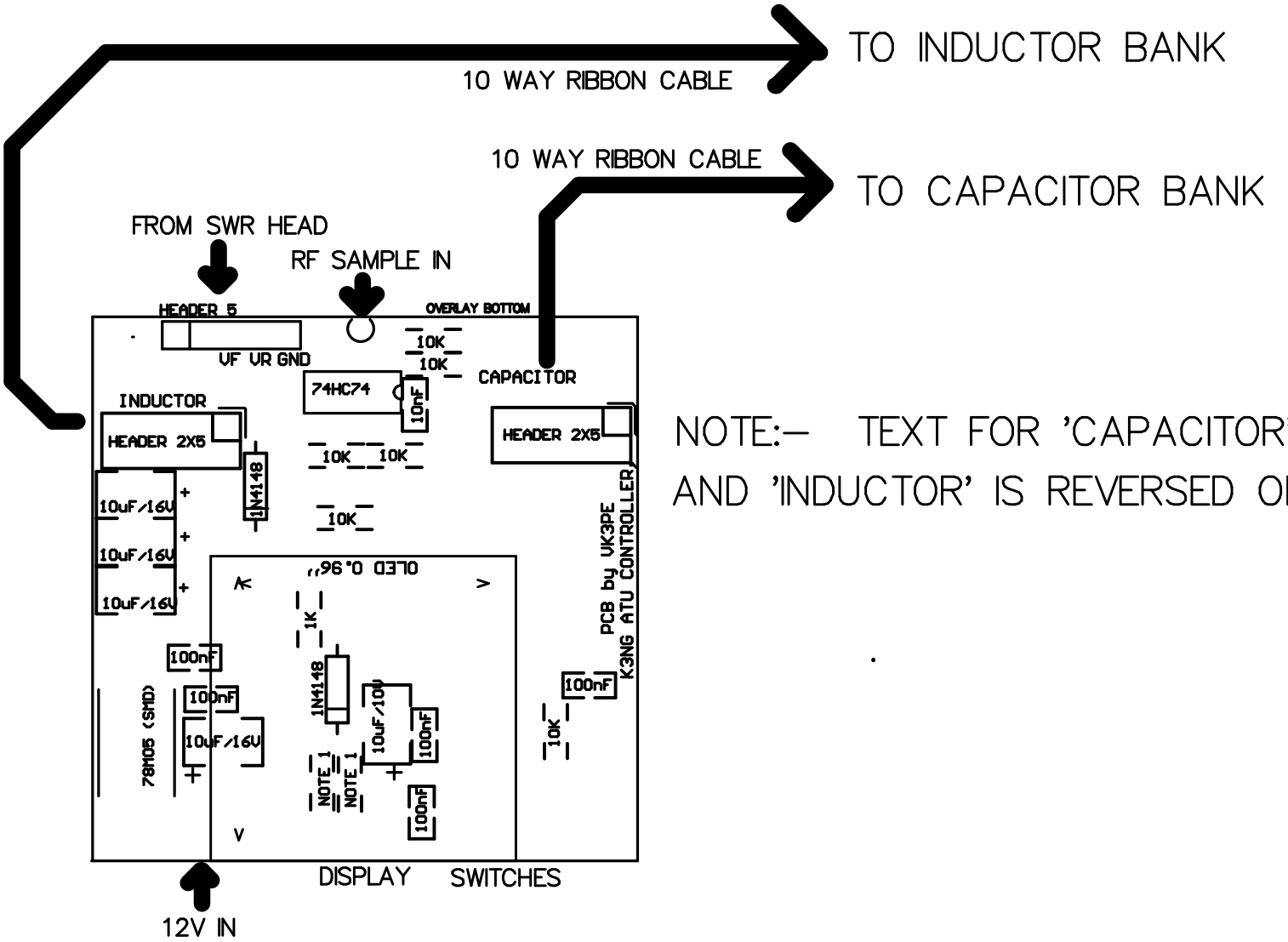

NOTE:– TEXT FOR 'CAPACITOR' AND 'INDUCTOR' IS REVERSED ON THE ACTUAL PCB